Protected by copyright. Copying for private or commercial purposes, in part or in whole, is not permitted unless authorised by Volkswagen AG. Volkswagen AG does not guarantee or accept any liability with respect to the correctness of information in this document. Copyright by Volkswagen AG.

Polo Estate 1998 ➤

5-speed manual gearbox 085									
Gearbox ID	CWL	CWU	CWW	DCA	DCE	DCJ	DCK	DRC	DWY
	DXB	DXC	DXK	DXL	DXN	DYF	DYH	EKY	ERA
	ERB	ERC	EQV	FFC	FFH	FFK	FFJ	FFN	FFP
	FFX	FHY	FJA	FJB					

Edition 11.1995

satelettronica

List of Workshop Manual Repair GroupsList of Workshop Manual Repair GroupsList of Workshop Manual Repair Groups

Polo Estate 1998 ➤

5-speed manual gearbox 085

Repair Group

00 - Technical data
30 - Clutch
34 - Controls, Housing
35 - Gears, Shafts
39 - Final drive, Differential rear

Protected by copyright. Copyright by Volkswagen AG.
Copyright by Volkswagen AG. Volkswagen AG does not guarantee or accept any liability with respect to the correctness of information in this document.
Copyright © 2011 Volkswagen AG, Wolfsburg

satelettronica

Technical information should always be available to the foremen and mechanics, because their careful and constant adherence to the instructions is essential to ensure vehicle road-worthiness and safety. In addition, the normal basic safety precautions for working on motor vehicles must, as a matter of course, be observed.

All rights reserved.
No reproduction without prior agreement from publisher.

Copyright © 2011 Volkswagen AG, Wolfsburg

Contents

Protected by copyright. Copyright by Volkswagen AG. This document is not permitted unless authorised by Volkswagen AG. Volkswagen AG does not guarantee or accept any liability with respect to the correctness of information in part or in whole, is not permitted unless authorised by Volkswagen AG.

00 - Technical data . . . 1
- **1 Gearbox identification . . . 1**
- 1.1 Gearbox identification . . . 1
- 1.2 Code letters, gearbox allocation, ratios, capacities . . . 2
- **2 Transmission layout . . . 10**
- 2.1 Transmission layout . . . 10
- **3 Calculating overall ratio "i" . . . 12**
- 3.1 Calculating overall ratio "i" . . . 12
- **4 General repair instructions . . . 12**
- 4.1 General repair instructions . . . 12

30 - Clutch . . . 15
- **1 Servicing clutch control . . . 15**
- 1.1 Servicing clutch control . . . 15
- 1.2 Assembly overview . . . 15
- 1.3 Checking function of clutch cable (automatic adjustment) . . . 19
- 1.4 Removing and installing clutch cable (automatic adjustment) . . . 20
- 1.5 Removing and installing clutch cable (no automatic adjustment) . . . 27
- 1.6 Removing and installing clutch pedal . . . 29
- **2 Servicing clutch release mechanism . . . 31**
- 2.1 Servicing clutch release mechanism . . . 31
- **3 Servicing clutch . . . 36**
- 3.1 Servicing clutch . . . 36

34 - Controls, Housing . . . 40
- **1 Servicing gear selector mechanism . . . 40**
- 1.1 Servicing gear selector mechanism . . . 40
- 1.2 Assembly overview . . . 40
- 1.3 Installing gear stick gaiter to gear stick knob . . . 46
- 1.4 Removing and installing selector mechanism complete . . . 47
- 1.5 Adjusting gear selector mechanism . . . 49
- **2 Removing and installing gearbox . . . 52**
- 2.1 Removing and installing gearbox . . . 52
- **3 Checking gearbox oil . . . 63**
- 3.1 Checking gearbox oil . . . 63
- **4 Dismantling and assembling gearbox . . . 64**
- 4.1 Dismantling and assembling gearbox . . . 64
- 4.2 Dismantling and assembling sequence . . . 70
- **5 Servicing clutch housing . . . 84**
- 5.1 Servicing clutch housing . . . 84
- **6 Adjusting selector finger and selector sleeve . . . 92**
- 6.1 Adjusting selector finger and selector sleeve . . . 92

35 - Gears, Shafts . . . 95
- **1 Dismantling and assembling input shaft . . . 95**
- 1.1 Dismantling and assembling input shaft . . . 95
- **2 Adjusting input shaft . . . 104**
- 2.1 Adjusting input shaft . . . 104
- **3 Dismantling and assembling output shaft . . . 107**
- 3.1 Dismantling and assembling output shaft . . . 107
- **4 Adjusting output shaft . . . 122**

satelettronica

4.1 Adjusting output shaft 122

39 - Final drive, Differential rear 125

1 Renewing selector shaft seal with gearbox in situ 125
1.1 Renewing selector shaft seal with gearbox in situ 125

2 Removing and installing oil seals for flanged shafts 126
2.1 Removing and installing oil seals for flanged shafts 126
2.2 Renewing oil seals for flanged shafts with gearbox installed 127

3 Dismantling and assembling differential 129
3.1 Dismantling and assembling differential 129
3.2 Removing and installing final drive gear wheel 136

4 Adjustment overview 139
4.1 Adjustment overview 139

5 Adjusting differential 139
5.1 Adjusting differential 139

Protected by copyright. Copying for private or commercial purposes, in part or in whole, is not permitted unless authorised by Volkswagen AG. Volkswagen AG does not guarantee or accept any liability with respect to the correctness of information in this document. Copyright by Volkswagen AG.

satelettronica

00 - Technical data

1 - Gearbox identification

1.1 - Gearbox identification

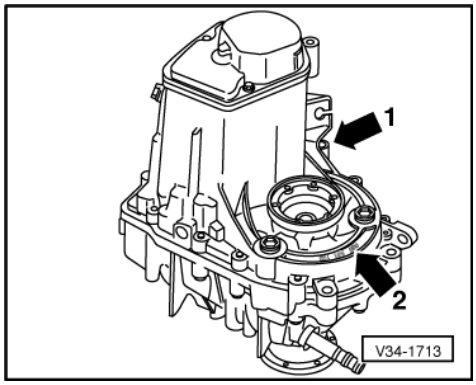

-> Location on gearbox

In the Caddy 1996 ‣, Polo Classic 1996 ‣and Polo Estate 1998 ‣ the manual gearbox 085 is installed in combination with the 4 Cyl. engine.

Code letters and date of manufacture (arrow 1)
Manual gearbox 085 (arrow 2)

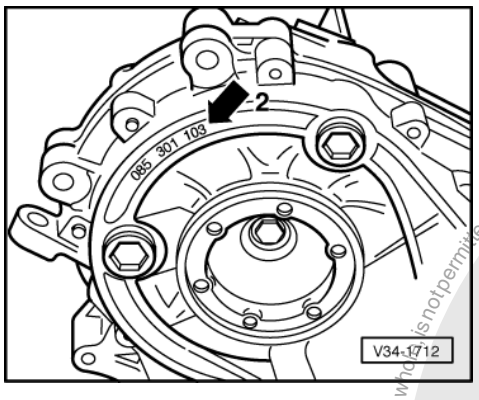

-> Manual gearbox 085 (arrow 2)

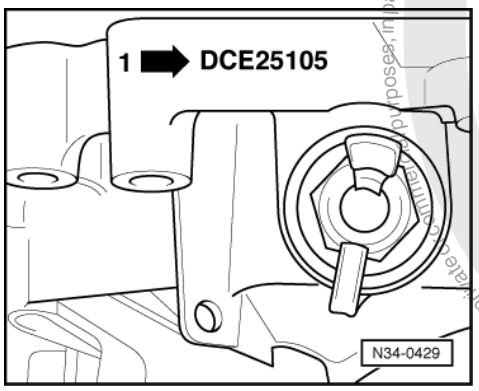

satelettronica
Protected by copyright. Copying for private or commercial purposes, in part or in whole is not permitted unless authorised by Volkswagen AG. Volkswagen AG does not guarantee or accept any liability with respect to the correctness of information in this document. Copyright by Volkswagen AG.

-> Code letters and date of manufacture of gearbox

(arrow 1)

Example:	DCE	25	10	5
	I	I	I	I
	I	I	I	I
	Code letters	Day	Month	Year (1995) of manufacture

Additional data depends on manufacture.

Note:

The gearbox code letters are also shown on the vehicle identification plates.

1.2 - Code letters, gearbox allocation, ratios, capacities

Manual gearbox		5-Speed 085		
Code letters		CWL 1)	CWU 1)	CWW 2)
Manufactured	from to	10.95 03.96	10.95 12.95	10.95 09.98
Allocation	Model	Polo Classic 1996 ▸	Polo Classic 1996 ▸	Caddy 1996 ▸
	Engine	1.4 l - 44 kW	1.4 l - 44 kW	1.4 l - 44 kW
Ratio: Z2 : Z1	Final drive	64 : 15 = 4.267	62 : 16 = 3.875	65 : 16 = 4.063
	1st gear	38 : 11 = 3.455	38 : 11 = 3.455	38 : 11 = 3.455
	2nd gear	43 : 22 = 1.955	44 : 21 = 2.095	44 : 21 = 2.095
	3rd gear	40 : 32 = 1.250	42 : 29 = 1.448	42 : 29 = 1.448
	4th gear	41 : 46 = 0.891	45 : 41 = 1.098	45 : 41 = 1.098
	5th gear	37 : 50 = 0.740	40 : 47 = 0.851	40 : 47 = 0.851
	6th gear	-	-	-
	Reverse gear	44 : 13 = 3.385	44 : 13 = 3.385	44 : 13 = 3.385
	Speedometer drive	12 : 20 = 0.600	12 : 20 = 0.600	12 : 20 = 0.600

1) Allocate differential planet gears via parts catalogue

2) France

Code letters	CWL	CWU	CWW
Capacity	3.1 litre 3)		
Specification	Gear oil G50 SAE 75W90 (synthetic oil)		
Clutch control	Mechanical	Mechanical	Mechanical
Clutch plate ø	190 mm	190 mm	200 mm
Drive shaft flange ø	90 mm	90 mm	90 mm
iOverall ratio in top gear	3.158	3.298	3.458

3) As of gearbox build date 23 10 5, gearbox oil capacity reduced to 2.7 l, gearbox modifications => Page 68

Protected by copyright. Copying for private or commercial purposes, in part or in whole, is not permitted unless authorised by Volkswagen AG. Volkswagen AG does not guarantee or accept any liability with respect to the correctness of information in this document. Copyright by Volkswagen AG.

satelettronica

Manual gearbox		5-Speed 085		
Code letters		DCA 1)	DCE	DCJ
Manufactured	from to	01.96 08.96	10.95 09.98	01.96 09.98
Allocation	Model	Polo Classic 1996 ▸	Caddy 1996 ▸	Polo Classic 1996 ▸
	Engine	1.4 l - 44 kW	1.4 l - 44 kW	1.4 l - 44 kW
Ratio: Z2 : Z1	Final drive	64 : 15 = 4.267	64 : 15 = 4.267	62 : 16 = 3.875
	1st gear	38 : 11 = 3.455	38 : 11 = 3.455	38 : 11 = 3.455
	2nd gear	43 : 22 = 1.955	44 : 21 = 2.095	44 : 21 = 2.095
	3rd gear	40 : 32 = 1.250	42 : 29 = 1.448	42 : 29 = 1.448
	4th gear	41 : 46 = 0.891	45 : 41 = 1.098	45 : 41 = 1.098
	5th gear	37 : 50 = 0.740	40 : 47 = 0.851	40 : 47 = 0.851
	6th gear	-	-	-
	Reverse gear	44 : 13 = 3.385	44 : 13 = 3.385	44 : 13 = 3.385
	Speedometer drive	12 : 20 = 0.600	12 : 20 = 0.600	12 : 20 = 0.600

1) France

Code letters	DCA	DCE	DCJ
Capacity	3.1 litre 2)		
Specification	Gear oil G50 SAE 75W90 (synthetic oil)		
Clutch control	Mechanical	Mechanical	Mechanical
Clutch plate ø	190 mm	200 mm	190 mm
Drive shaft flange ø	90 mm	90 mm	90 mm
iOverall ratio in top gear	3.158	3.631	3.298

2) As of gearbox build date 23 10 5, gearbox oil capacity reduced to 2.7 l, gearbox modifications => Page 68

Manual gearbox		5-Speed 085		
Code letters		DCK	DRC	DWY 1)
Manufactured	from to	10.96 01.99	10.96 09.98	09.98
Allocation	Model	Caddy 1996 ▸1) Polo Classic 1996 ▸	Caddy 1996 ▸	Polo Classic 1996 ▸ Polo Estate 1998 ▸
	Engine	1.6 l - 55 kW	1.6 l - 55 kW	1.4 l - 44 kW
Ratio: Z2 : Z1	Final drive	61 : 17 = 3.588	62 : 16 = 3.875	64 : 15 = 4.267
	1st gear	38 : 11 = 3.455	38 : 11 = 3.455	38 : 11 = 3.455
	2nd gear	44 : 21 = 2.095	44 : 21 = 2.095	43 : 22 = 1.955
	3rd gear	42 : 29 = 1.448	42 : 29 = 1.448	40 : 32 = 1.250
	4th gear	45 : 41 = 1.098	45 : 41 = 1.098	41 : 46 = 0.891
	5th gear	40 : 47 = 0.851	41 : 46 = 0.891	37 : 50 = 0.740
	6th gear	-	-	-
	Reverse gear	44 : 13 = 3.385	44 : 13 = 3.385	44 : 13 = 3.385

Protected by copyright. Copying for private or commercial purposes, in part or in whole, is not permitted unless authorised by Volkswagen AG. Volkswagen AG does not guarantee or accept any liability with respect to the correctness of information in this document. Copyright by Volkswagen AG.
satelettronica

Manual gearbox	5-Speed 085		
Code letters	DCK	DRC	DWY 1)
Speedometer drive	12 : 20 = 0.600	12 : 20 = 0.600	12 : 20 = 0.600

From 09.98 the selector mechanism within gearbox has been redesigned. Allocate components via parts catalogue.

1) France

Code letters	DCK	DRC	DWY
Capacity	2.7 litre		
Specification	Gear oil G50 SAE 75W90 (synthetic oil)		
Clutch control	Mechanical	Mechanical	Mechanical
Clutch plate ø	200 mm	200 mm	190 mm
Drive shaft flange ø	90 mm	90 mm	90 mm
iOverall ratio in top gear	3.053	3.453	3.158

Manual gearbox		5-Speed 085		
Code letters		DXB	DXC 1)	DXK
Manufactured	from to	09.98 07.01	09.98	09.98 07.01
Allocation	Model	Caddy 1996 ▸	Caddy 1996 ▸	Polo Classic 1996 ▸ Polo Estate 1998 ▸
	Engine	1.4 l - 44 kW	1.4 l - 44 kW	1.4 l - 44 kW
Ratio: Z2 : Z1	Final drive	64 : 15 = 4.267	65 : 16 = 4.063	62 : 16 = 3.875
	1st gear	38 : 11 = 3.455	38 : 11 = 3.455	38 : 11 = 3.455
	2nd gear	44 : 21 = 2.095	44 : 21 = 2.095	44 : 21 = 2.095
	3rd gear	42 : 29 = 1.448	42 : 29 = 1,448	42 : 29 = 1.448
	4th gear	45 : 41 = 1.098	45 : 41 = 1.098	45 : 41 = 1.098
	5th gear	40 : 47 = 0.851	40 : 47 = 0.851	40 : 47 = 0.851
	6th gear	-	-	-
	Reverse gear	44 : 13 = 3.385	44 : 13 = 3.385	44 : 13 = 3.385
	Speedometer drive	12 : 20 = 0.600	12 : 20 = 0.600	12 : 20 = 0.600

From 09.98 the selector mechanism within gearbox has been redesigned. Allocate components via parts catalogue.

1) France

Code letters	DXB	DXC	DXK
Capacity	2.7 litre		
Specification	Gear oil G50 SAE 75W90 (synthetic oil)		
Clutch control	Mechanical	Mechanical	Mechanical
Clutch plate ø	190 mm	190 mm	190 mm
Drive shaft flange ø	90 mm	90 mm	90 mm
iOverall ratio in top gear	3.631	3.458	3.298

satelettronica

Manual gearbox		5-Speed 085		
Code letters		DXN	DXL	DYF 1)
Manufactured	from to	09.98 07.01	09.98 09.00	10.99 07.01
Allocation	Model	Caddy 1996 ▸ 2)	Caddy 1996 ▸	Polo Classic 1996 ▸ Polo Estate 1996 ▸
	Engine	1.6 l - 55 kW	1.6 l - 55 kW	1.4 l - 44 kW 1.4 l - 55 kW
Ratio: Z2 : Z1	Final drive	61 : 17 = 3.588	62 : 16 = 3.875	62 : 16 = 3.875
	1st gear	38 : 11 = 3.455	38 : 11 = 3.455	38 : 11 = 3.455
	2nd gear	44 : 21 = 2.095	44 : 21 = 2.095	44 : 21 = 2.095
	3rd gear	42 : 29 = 1.448	42 : 29 = 1,448	42 : 29 = 1.448
	4th gear	45 : 41 = 1.098	45 : 41 = 1.098	45 : 41 = 1.098
	5th gear	40 : 47 = 0.851	41 : 46 = 0.891	40 : 47 = 0.851
	6th gear	-	-	-
	Reverse gear	44 : 13 = 3.385	44 : 13 = 3.385	44 : 13 = 3.385
	Speedometer drive	12 : 20 = 0.600	12 : 20 = 0.600	12 : 20 = 0.600

1) For vehicles with EDL; differential reinforced. Allocate components via parts catalogue

2) France

Code letters	DXN	DXL	DYF
Capacity	2.7 litre		
Specification	Gear oil G50 SAE 75W90 (synthetic oil)		
Clutch control	Mechanical	Mechanical	Mechanical
Clutch plate ø	200 mm	200 mm	190 mm 3)
Drive shaft flange ø	90 mm	90 mm	90 mm
iOverall ratio in top gear	3.053	3.453	3.298

3) 1.4 ltr. - 55 kW = 200 mmø

Manual gearbox		5-Speed 085		
Code letters		DYH 1)	EKY 2)	ERA
Manufactured	from to	10.99 07.01	10.99 07.01	01.99 09.99
Allocation	Model	Polo Classic 1996 ▸ Polo Estate 1998 ▸	Polo Classic 1996 ▸	Polo Classic 1996 ▸ Polo Estate1998 ▸
	Engine	1.6 l - 55 kW	1.0 l - 51 kW	1.4 l - 40 kW 3) 1.4 l - 44 kW 1.4 l - 74 kW
Ratio: Z2 : Z1	Final drive	61 : 17 = 3.588	73 : 16 = 4.563	62 : 16 = 3.875
	1st gear	38 : 11 = 3.455	38 : 11 = 3.455	38 : 11 = 3.455
	2nd gear	44 : 21 = 2.095	44 : 21 = 2.095	44 : 21 = 2.095
	3rd gear	42 : 29 = 1.448	42 : 29 = 1,448	42 : 29 = 1.448
	4th gear	45 : 41 = 1.098	45 : 41 = 1.098	45 : 41 = 1.098
	5th gear	40 : 47 = 0.851	40 : 47 = 0.851	40 : 47 = 0.851
	6th gear	-	-	-
	Reverse gear	44 : 13 = 3.385	44 : 13 = 3.385	44 : 13 = 3.385

Protected by copyright. Copying for private or commercial purposes, in part or in whole, is not permitted unless authorised by Volkswagen AG. Volkswagen AG does not guarantee or accept any liability with respect to the correctness of information in this document. Copyright by Volkswagen AG.
satelettronica

Speedometer drive	12 : 20 = 0.600	12 : 20 = 0.600	12 : 20 = 0.600

1) For vehicles with EDL, differential reinforced. Allocate components via parts catalogue

2) Brazil

3) Austria

Code letters	DYH	EKY	ERA
Capacity	2.7 litre		
Specification	Gear oil G50 SAE 75W90 (synthetic oil)		
Clutch control	Mechanical	Mechanical	Mechanical
Clutch plate ø	200 mm	200 mm	190 mm 4)
Drive shaft flange ø	90 mm	90 mm	90 mm
iOverall ratio in top gear	3.053	3.883	3.298

4) 1.4 l - 74 kW = 200 mm ø

Manual gearbox		5-Speed 085		
Code letters		ERB	ERC	EQV
Manufactured	from to	01.99 09.99	01.99 09.99	01.99 07.01
Allocation	Model	Caddy 1996 ▸	Polo Classic 1996 ▸ Polo Estate 1998 ▸	Caddy 1996 ▸
	Engine	1.6 l - 55 kW	1.6 l - 55 kW	1.4 l - 44 kW
Ratio: Z2 : Z1	Final drive	62 : 16 = 3.875	61 : 17 = 3.588	64 : 15 = 4.267
	1st gear	38 : 11 = 3.455	38 : 11 = 3.455	38 : 11 = 3.455
	2nd gear	44 : 21 = 2.095	44 : 21 = 2.095	44 : 21 = 2.095
	3rd gear	42 : 29 = 1.448	42 : 29 = 1,448	42 : 29 = 1.448
	4th gear	45 : 41 = 1.098	45 : 41 = 1.098	45 : 41 = 1.098
	5th gear	41 : 46 = 0.891	40 : 47 = 0.851	40 : 47 = 0.851
	6th gear	-	-	-
	Reverse gear	44 : 13 = 3.385	44 : 13 = 3.385	44 : 13 = 3.385
	Speedometer drive	12 : 20 = 0.600	12 : 20 = 0.600	12 : 20 = 0.600

Code letters	ERB	ERC	EQV
Capacity	2.7 litre		
Specification	Gear oil G50 SAE 75W90 (synthetic oil)		
Clutch control	Mechanical	Mechanical	Mechanical
Clutch plate ø	200 mm	200 mm	190 mm
Drive shaft flange ø	90 mm	90 mm	90 mm
iOverall ratio in top gear	3.298	3.053	3.631

Manual gearbox		5-Speed 085		
Code letters		FFC	FFH	FFK1)
Manufactured	from to	07.01	07.01	07.01
Allocation	Model	Caddy 1996 ▸	Polo Classic 1996 ▸ Polo Estate 1998 ▸	Polo Classic 1996 ▸ Polo Estate 1998 ▸

Protected by copyright. Copying for private or commercial purposes, in part or in whole, is not permitted unless authorised by Volkswagen AG. Volkswagen AG does not guarantee or accept any liability with respect to the correctness of information in this document. Copyright by Volkswagen AG.

satelettronica

	Engine	1.4 l - 44 kW 1.4 l - 55 kW	1.4 l - 44 kW 1.4 l - 55 kW	1.4 l - 44 kW 1.4 l - 55 kW
Ratio: Z2 : Z1	Final drive	64 : 15 = 4.267	62 : 16 = 3.875	62 : 16 = 3.875
	1st gear	38 : 11 = 3.455	38 : 11 = 3.455	38 : 11 = 3.455
	2nd gear	44 : 21 = 2.095	44 : 21 = 2.095	44 : 21 = 2.095
	3rd gear	42 : 29 = 1.448	42 : 29 = 1,448	42 : 29 = 1.448
	4th gear	45 : 41 = 1.098	45 : 41 = 1.098	45 : 41 = 1.098
	5th gear	41 : 46 = 0.891	40 : 47 = 0.851	40 : 47 = 0.851
	6th gear	-	-	-
	Reverse gear	37 : 11 = 3.364	37 : 11 = 3.364	37 : 11 = 3.364
	Speedometer drive	12 : 20 = 0.600	12 : 20 = 0.600	12 : 20 = 0.600

From 07.01 differential reinforced. Allocate components via parts catalogue

1) For vehicles with EDL; differential reinforced. Allocate components via parts catalogue

Code letters	FFC	FFH	FFK
Capacity	2.7 litre		
Specification	Gear oil G50 SAE 75W90 (synthetic oil)		
Clutch control	Mechanical	Mechanical	Mechanical
Clutch plate ø	190 mm 2)	190 mm 2)	190 mm 2)
Drive shaft flange ø	90 mm	90 mm	90 mm
iOverall ratio in top gear	3.631	3.298	3.298

2) 1.4 ltr. - 55 kW = 200 mmø

Manual gearbox		5-Speed 085		
Code letters		FFJ	FHY1)	FFN2)
Manual gearbox	from to	07.01 08.01	08.01	07.01 08.01
Allocation	Model	Caddy 1996 ▸	Caddy 1996 ▸	Polo Classic 1996 ▸ Polo Estate 1998 ▸
	Engine	1.6 l - 55 kW	1.6 l - 55 kW	1.6 l - 55 kW
Ratio: Z2 : Z1	Final drive	62 : 16 = 3.875	62 : 16 = 3.875	61 : 17 = 3.588
	1st gear	38 : 11 = 3.455	38 : 11 = 3.455	38 : 11 = 3.455
	2nd gear	44 : 21 = 2.095	44 : 21 = 2.095	44 : 21 = 2.095
	3rd gear	42 : 29 = 1.448	42 : 29 = 1,448	42 : 29 = 1.448
	4th gear	45 : 41 = 1.098	45 : 41 = 1.098	45 : 41 = 1.098
	5th gear	41 : 46 = 0.891	41 : 46 = 0.891	40 : 47 = 0.851
	6th gear	-	-	-
	Reverse gear	37 : 11 = 3.364	37 : 11 = 3.364	37 : 11 = 3.364
	Speedometer drive	12 : 20 = 0.600	12 : 20 = 0.600	12 : 20 = 0.600

1)Modified input and output shaft surface treatment. Allocate components via parts catalogue.

2) For vehicles with EDL; differential reinforced. Allocate components via parts catalogue

Code letters	FFJ	FHY	FFN
Capacity	2.7 litre		
Specification	Gear oil G50 SAE 75W90 (synthetic oil)		

Protected by copyright. Copyright by Volkswagen AG. Volkswagen AG does not give any guarantee or any liability with respect to the correctness of information in this document. Copying for private or commercial purposes, in part or in whole, is not permitted unless authorised by Volkswagen AG.
satelettronica

Code letters	FFJ	FHY	FFN
Clutch control	Mechanical	Mechanical	Mechanical
Clutch plate ø	200 mm	200 mm	200 mm
Drive shaft flange ø	90 mm	90 mm	90 mm
iOverall ratio in top gear	3.453	3.453	3.298

Manual gearbox		5-Speed 085		
Code letters		FFX 1)	FFP 2)	FJA 2) 3)
Manufactured	from to	07.01	07.01 08.01	08.01
Allocation	Model	Polo Classic 1996 ▸	Polo Classic 1996 ▸ Polo Estate1998 ▸	Polo Classic 1996 ▸ Polo Estate 1998 ▸
	Engine	1.0 l - 51 kW	1.6 l - 55 kW	1.6 l - 55 kW
Ratio: Z2 : Z1	Final drive	73 : 16 = 4.563	61 : 17 = 3.588	61 : 17 = 3.588
	1st gear	38 : 11 = 3.455	38 : 11 = 3.455	38 : 11 = 3.455
	2nd gear	44 : 21 = 2.095	44 : 21 = 2.095	44 : 21 = 2.095
	3rd gear	42 : 29 = 1.448	42 : 29 = 1,448	42 : 29 = 1.448
	4th gear	45 : 41 = 1.098	45 : 41 = 1.098	45 : 41 = 1.098
	5th gear	40: 47 = 0.891	40 : 47 = 0.851	40 : 47 = 0.851
	6th gear	-	-	-
	Reverse gear	37 : 11 = 3.364	37 : 11 = 3.364	37 : 11 = 3.364
	Speedometer drive	12 : 20 = 0.600	12 : 20 = 0.600	12 : 20 = 0.600

1) Brazil

2) For vehicles with EDL; differential reinforced. Allocate components via parts catalogue

3) Surface treatment of input shaft and output shaft has been revised. Allocate components via parts catalogue

Code letters	FFX	FFP	FJA
Capacity	2.7 litre		
Specification	Gear oil G50 SAE 75W90 (synthetic oil)		
Clutch control	Mechanical	Mechanical	Mechanical
Clutch plate ø	200 mm	200 mm	200 mm
Drive shaft flange ø	90 mm	90 mm	90 mm
iOverall ratio in top gear	3.883	3.053	3.053

Manual gearbox		5-Speed 085
Code letters		FJB 1)
Manufactured	from to	08.01
Allocation	Model	Polo Classic 1996 ▸ Polo Estate 1998 ▸
	Engine	1.6 l - 55 kW
Ratio: Z2 : Z1	Final drive	61 : 17 = 3.588
	1st gear	38 : 11 = 3.455
	2nd gear	44 : 21 = 2.095
	3rd gear	42 : 29 = 1.448
	4th gear	45 : 41 = 1.098

Protected by copyright. Copyright by Volkswagen AG. Volkswagen AG does not guarantee or accept any liability with respect to the correctness of information in this document. Copyright by Volkswagen AG. Reproduction, distribution and communication to third parties without express authorisation is prohibited unless authorised by Volkswagen AG. Volkswagen AG does not guarantee or accept any liability with respect to the correctness of information in this document. Copyright by Volkswagen AG. Reproduced by copyright. Copyright by Volkswagen AG.

satelettronica

Manual gearbox		5-Speed 085
	5th gear	40 : 47 = 0.851
	6th gear	-
	Reverse gear	37 : 11 = 3.364
	Speedometer drive	12 : 20 = 0.600

1)Modified input and output shaft surface treatment. Allocate components via parts catalogue.

Code letters	FJB		
Capacity	2.7 litre		
Specification	Gear oil G50 SAE 75W90 (synthetic oil)		
Clutch control	mechanical		
Clutch plate ø	200 mm		
Drive shaft flange ø	90 mm		
iOverall ratio in top gear	3.053		

Protected by copyright. Copying for private or commercial purposes, in part or in whole, is not permitted unless authorised by Volkswagen AG. Volkswagen AG does not guarantee or accept any liability with respect to the correctness of information in this document. Copyright by Volkswagen AG.

satelettronica

2 - Transmission layout

2.1 - Transmission layout

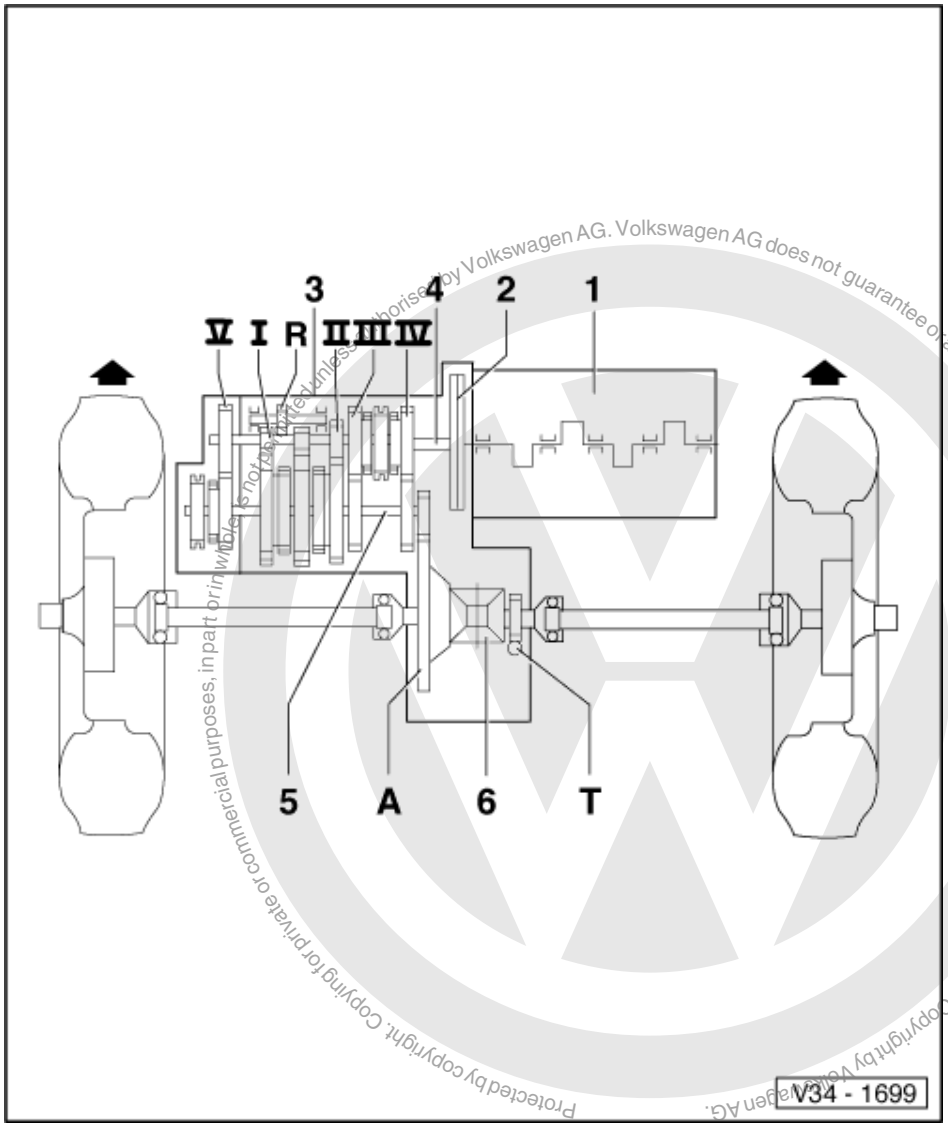

Protected by copyright. Copying for private or commercial purposes, in part or in whole, is not permitted unless authorised by Volkswagen AG. Volkswagen AG does not guarantee or accept any liability with respect to the correctness of information in this document. Copyright by Volkswagen AG.

satelettronica

Designation

1 Engine
2 Clutch
3 Gearbox
4 Input shaft
5 Output shaft/pinion shaft
6 Differential

Arrows point in direction of travel

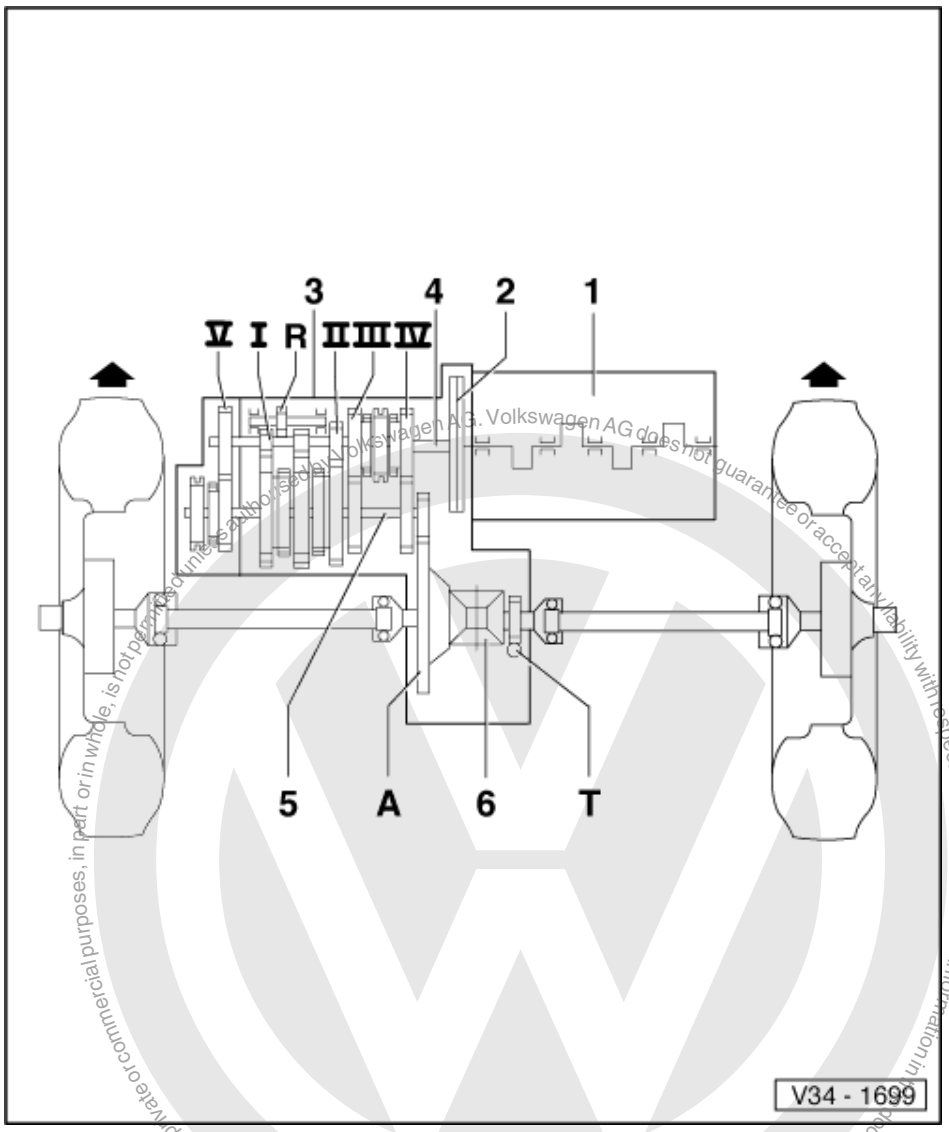

Protected by copyright. Copying for private or commercial purposes, in part or in whole, is not permitted unless authorised by Volkswagen AG. Volkswagen AG does not guarantee or accept any liability with respect to the correctness of information in this document. Copyright by Volkswagen AG.

satelettronica

Gear ratios

I	- 1st gear
II	- 2nd gear
III	- 3rd gear
IV	- 4th gear
V	- 5th gear
R	- Reverse gear
A	- Final drive
T	- Speedometer drive

Arrows point in direction of travel

3 - Calculating overall ratio "i"

3.1 - Calculating overall ratio "i"

Example:

	5th gear	Final drive
Drive gear	ZG1 = 47	ZA1 = 15
Driven gear	ZG2 = 40	ZA2 = 64

i= Z2/ Z1 1)

iG = Gear ratio = ZG2: ZG1 = 40 : 47 = 0.851

iA = Axle ratio = ZA2 : ZA1 = 64 : 15 = 4.267

itotal = Overall ratio
= iG x iA = 0.851 x 4.267 = 3.631

1) Z1 = No. of teeth driving gear, Z2 = No. of teeth driven gear

4 - General repair instructions

4.1 - General repair instructions

To ensure perfect and successful gearbox repairs, the greatest care and cleanliness as well as the use of good and proper tools is essential. Obviously, the basis rules for safety are also applicable during repair work.

A number of generally valid instructions applicable for the various repair procedures - which were previously repeated a number of times at numerous places in the Workshop Manual - are summarized here. They apply to this Workshop Manual.

Gearbox

- When installing ensure that the dowel sleeves between the engine and gearbox are correctly located.
- When changing a gearbox fill with gear oil to the lower edge of the filler hole.
- Capacities and specifications => from Page 2 .

Gaskets, sealing rings

- Thoroughly clean joint surfaces and apply sealant AMV 188 200 03.
- Apply sealant uniformly but not too thick.
- Renew "O-rings".
- Radial shaft oil seals.

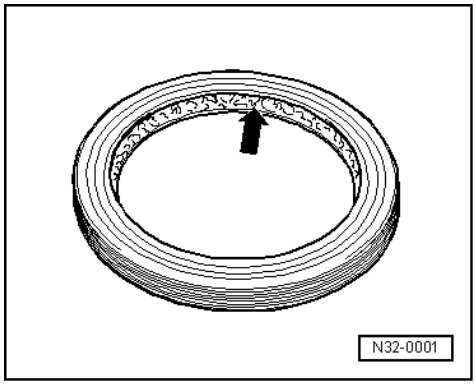

Protected by copyright. Copying for private or commercial purposes, in part or in whole is not permitted unless authorised by Volkswagen AG. Volkswagen AG does not guarantee or accept any liability with respect to the correctness of information in this document. Copyright by Volkswagen AG.
satelettronica

Before installing:

-> Lightly oil outer edge, fill space between sealing lips with grease.

After installation:

Check gearbox oil; if necessary top-up to lower edge of oil filler hole, specification =>from Page 2 .

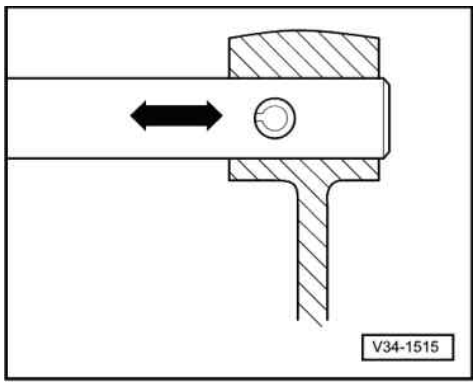

Locking devices

- Renew circlips.
- Do not overstretch circlips.
- Circlips must locate properly in the groove.
- -> Renew spring pins
  Installation position: Slot longitudinal to line of force.

Bolts and nuts

- Tighten and loosen bolts and nuts for securing covers and housings in a diagonal sequence.
- Especially delicate parts, such as clutch pressure plates, must not be distorted. Loosen and tighten bolts and nuts in stages in a diagonal sequence.
- Tightening torques as specified are for unoiled bolts and nuts.
- Renew self-locking bolts and nuts.

Bearings

- Install needle bearings with lettered side (thicker metal) towards fitting tool.
- Lubricate all gearbox bearings with gear oil before installing. Lubricate with special care when measuring turning torque.
- Taper roller bearings fitted to one shaft must be renewed as a set. Use same make of bearings if possible!
- Heat inner taper roller bearing races to approx. 100 °C before pressing on.
- Do not interchange outer or inner races of bearings of the same size. The bearings are matched in pairs.

Shims

- Measure shims at several points with a micrometer. Tolerance variations make it possible to find the exact shim thickness required.
- Check for burrs and damage.
- Only install perfect shims.

Synchronizer rings

- Do not interchange. When reusing always fit to the same gear.
- Check for wear and renew if necessary.
- Coat with gear oil before installing.

Selector gears

- Before installing clean and heat on a hot plate to approx. 100 °C.

Protected by copyright. Copying for private or commercial purposes, in any form or medium, is not permitted unless authorised by Volkswagen AG. Volkswagen AG does not guarantee or accept any liability with respect to the correctness of information in this document. Copyright by Volkswagen AG.

satelettronica

- Temperature can be checked with temperature tester V.A.G 1558.

Protected by copyright. Copying for private or commercial purposes, in part or in whole, is not permitted unless authorised by Volkswagen AG. Volkswagen AG does not guarantee or accept any liability with respect to the correctness of information in this document. Copyright by Volkswagen AG.

satelettronica

30 - Clutch

1 - Servicing clutch control

1.1 - Servicing clutch control

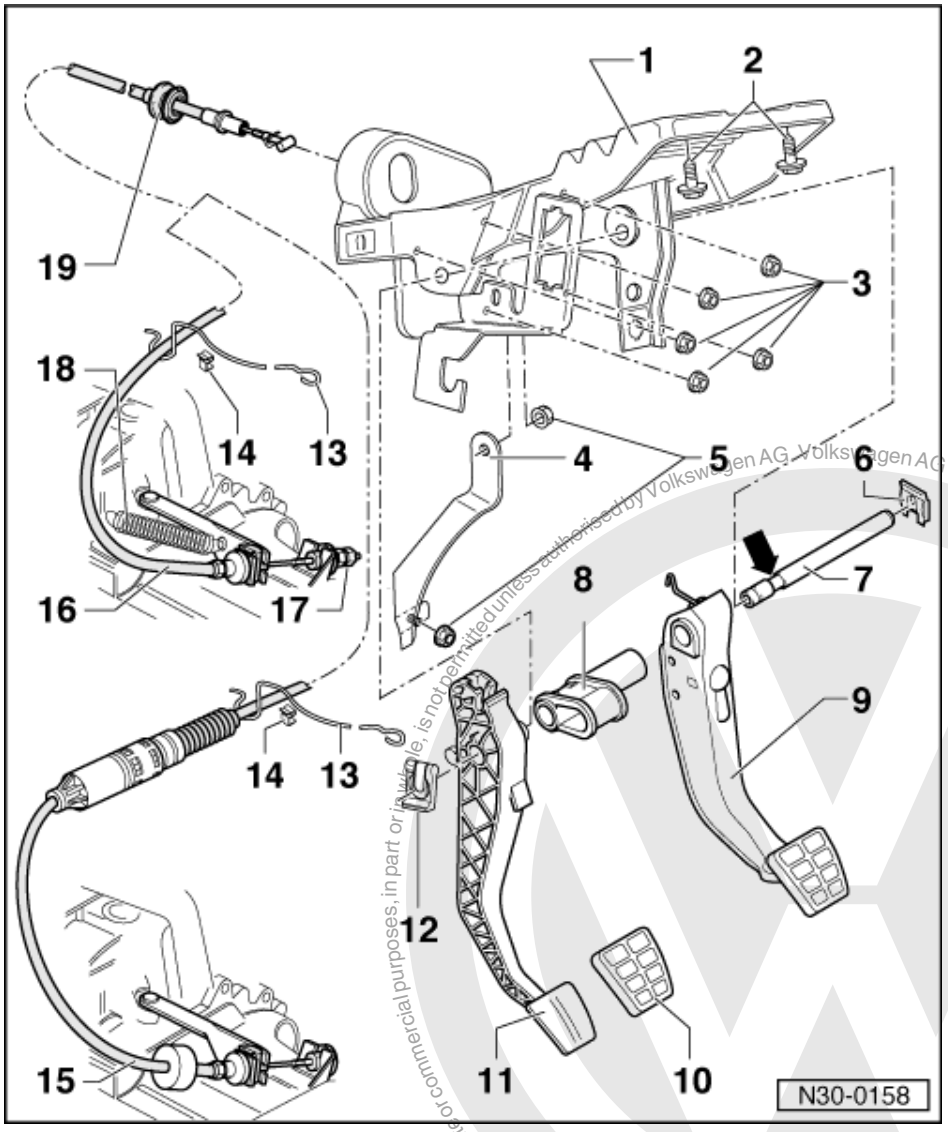

1.2 - Assembly overview

Notes:

- Disconnect battery earth strap.
- For vehicles with coded radio obtain radio code.
- Lubricate all bearings and contact surfaces with poly resin grease part No. G 052 142 A2.
- Before working on pedal cluster remove left storage shelf.

Protected by copyright. Copying for private or commercial purposes, in part or in whole, is not permitted unless authorised by Volkswagen AG. Volkswagen AG does not guarantee or accept any liability with respect to the correctness of information in this document. Copyright by Volkswagen AG.
satelettronica

=> General body repairs; Repair group 70; Removing and installing dash panel Removing and installing dash panel

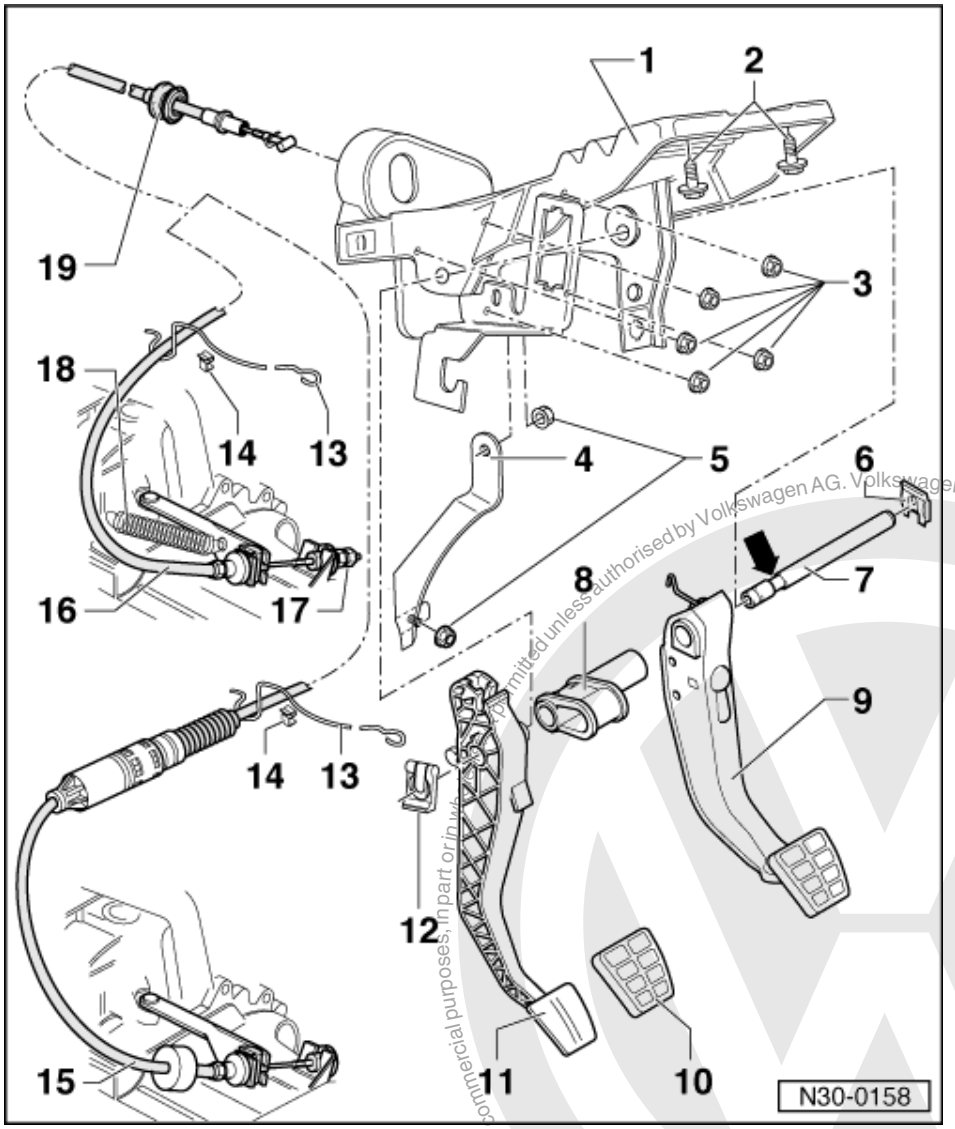

1 Mounting bracket
- Before removal remove steering column with column tube

=> Repair group 48; removing and installing steering column and column tube. removing and installing steering column and column tube.

- Separate brake pedal from master brake cylinder

=> Repair group 47; separating brake pedal from brake servo. separating brake pedal from brake servo.

2 Hexagon bolt, 25 Nm
3 Self-locking hexagon nut, 25 Nm
- Qty. 5
- For mounting bracket to stud/brake servo

4 Support
5 Hexagon bolt, 25 Nm
6 Securing clip

Protected by copyright. Copying for private or commercial purposes, in part or in whole, is not permitted unless authorised by Volkswagen AG. Volkswagen AG does not guarantee or accept any liability with respect to the correctness of information in this document. Copyright by Volkswagen AG.
satelettronica

- Removing and installing => Page 30

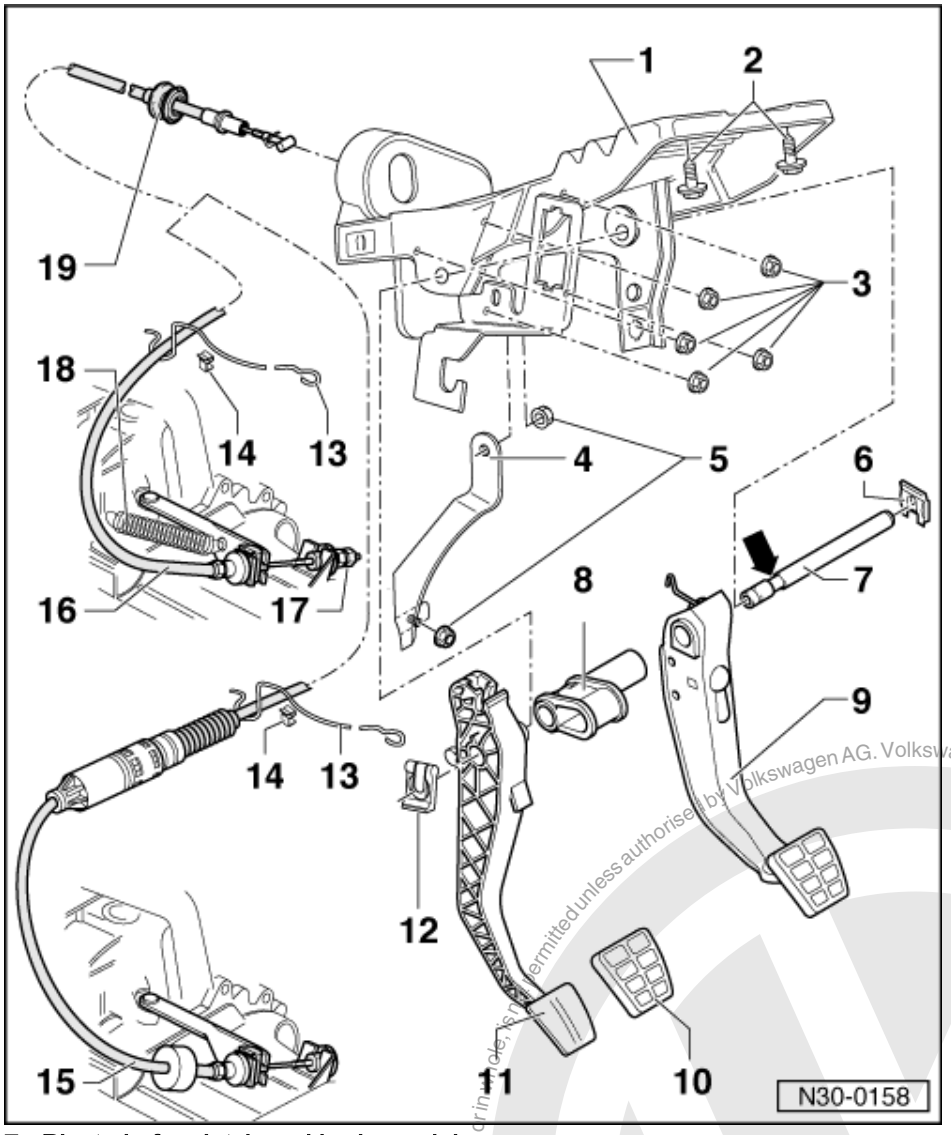

7 Pivot pin for clutch and brake pedal
- Installation position: The groove (arrow) is located on the clutch pedal side.

8 Mounting bush
- For mounting the steering column

9 Brake pedal

10 Cap

11 Clutch pedal
- Removing and installing =>Page 29

12 Securing clip
- Removing and installing =>Page 29

13 Bracket
- For clutch cable
- To body

14 Clip
- Bracket for expansion tank

Protected by copyright. Copying for private or commercial purposes, in part or in whole, is not permitted unless authorised by Volkswagen AG. Volkswagen AG does not guarantee or accept any liability with respect to the correctness of information in this document. Copyright by Volkswagen AG.
satelettronica

Copyright by Volkswagen AG. Volkswagen AG does not guarantee or accept any liability with respect to the correctness of information in this document. Copyright by Volkswagen AG. Reproduction of this document or parts thereof is not permitted without written authorisation by Volkswagen AG. Copyright by Volkswagen AG. Reproduction of this document or parts thereof is not permitted without written authorised by Volkswagen AG. Volkswagen AG does not guarantee or accept any liability with respect to the correctness of information in this document. Copyright by Volkswagen AG.

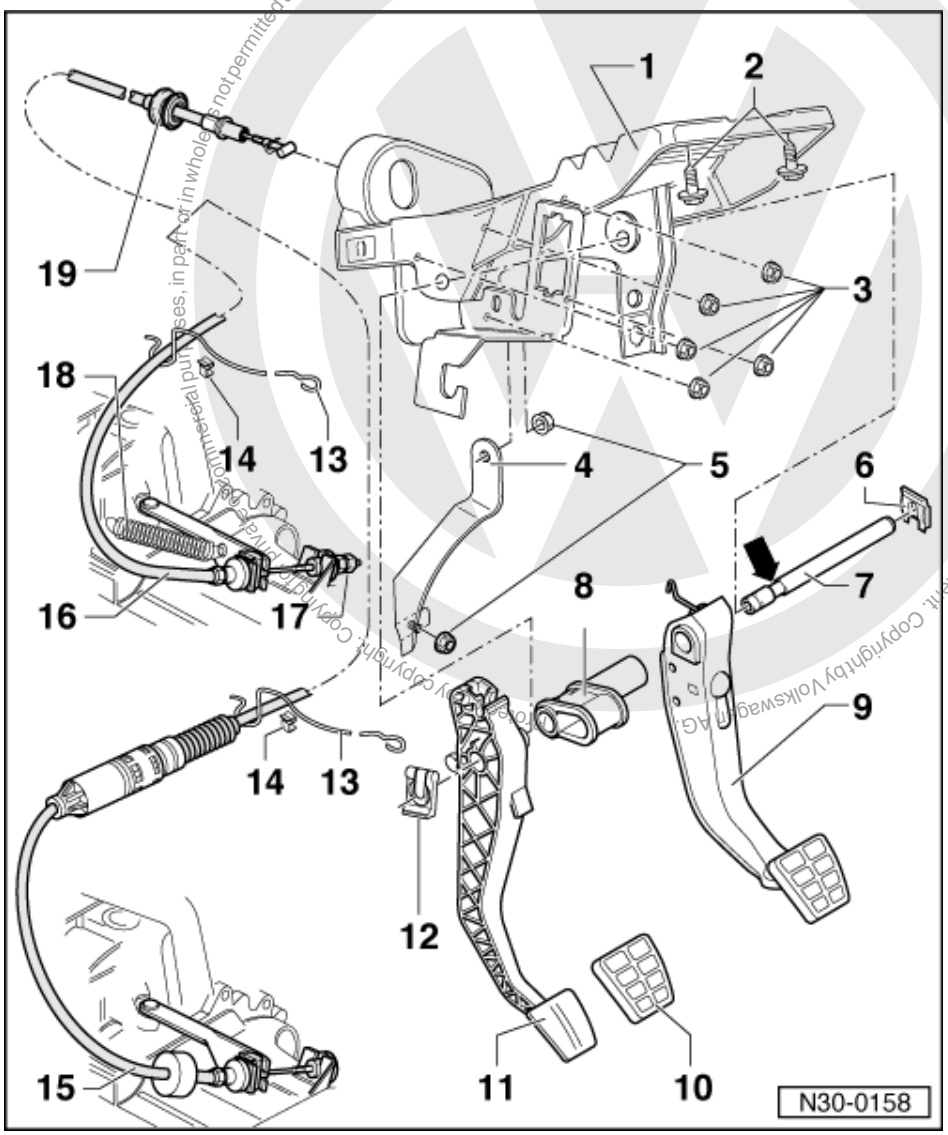

15 Clutch cable

- With automatic adjustment
- Allocate via parts catalogue
- Checking function
  =>Page 19
- Removing and installing
  =>Page 20

16 Clutch cable

- No automatic adjustment
- Allocate via parts catalogue
- Removing and installing
  =>Page 27
- Adjusting clutch
  => Page 28

17 Clutch cable adjustment nut

- Lock with lock nut after adjusting

18 Return spring

- Must not be installed with clutch cables which have automatic adjustment

19 Bellows

- Clip into bulkhead

satelettronica

1.3 - Checking function of clutch cable (automatic adjustment)

- The clutch cable adjusting mechanism must be undamaged.

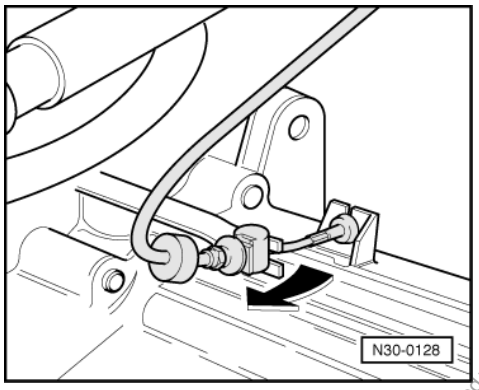

- Depress clutch pedal fully onto stop at least 5 times.
- -> Move clutch release lever approx. 10 mm, opposite direction of operation direction (direction of arrow). The clutch release lever must move freely.

Notes:

To prevent an early and therefore unjustified replacement of the clutch cable, observe the following during the functional check:

- Before repeating the functional check always pump the clutch pedal at least 5 times.
- Only when the release lever cannot be moved opposite to the operating direction does the clutch cable adjustment mechanism require servicing.

If the adjusting mechanism functional check cannot be carried out as described on Page 19 then it is possible that the mechanism has been rendered unserviceable by mis-handling (e.g. hooked into release lever under tension).

Identification:
The clutch release lever cannot be moved opposite to the direction of operation, even after operating clutch pedal several times.

The non-functioning adjusting mechanism will lead to clutch slip and therefore premature clutch wear.

Making clutch cable adjusting mechanism serviceable.

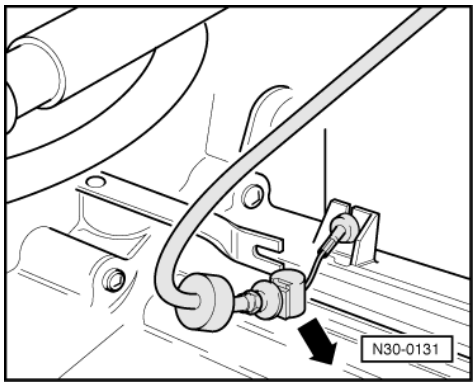

- -> Pull clutch cable out of release lever mounting by pulling forcefully (direction of arrow).
- Pull rubber buffer out of support on gearbox.

Protected by copyright. Copying for private or commercial purposes, in part or in whole, is not permitted unless authorised by Volkswagen AG. Volkswagen AG does not guarantee or accept any liability with respect to the correctness of information in this document. Copyright by Volkswagen AG.
satelettronica

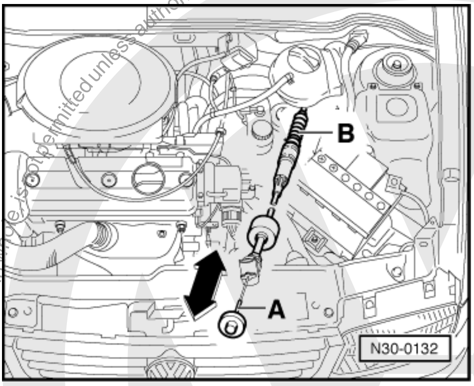

- -> Move braiding -A- of cable to and fro several times, until the adjusting mechanism -B- can be pressed together.
- Tension clutch cable with retaining strap =>from Page 20 .
- Press rubber buffer into support bracket on gearbox.
- Connect clutch cable to release lever.
- After installing clutch pedal remove retaining strap.
- Carry out functional check again.

1.4 - Removing and installing clutch cable (automatic adjustment)

- In cases of complaint check function of clutch cable before removal => Page 19 .

Removing

- Disconnect earth strap from battery

Note:

Note radio coding for vehicles with coded radio.

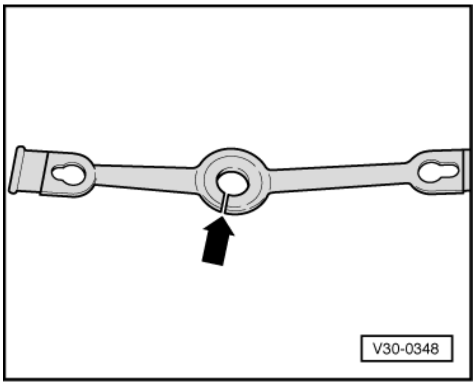

- If no retaining strap is present then the adjusting mechanism must be tensioned with the retaining strap illustrated to enable it to be removed and installed. It is enclosed with new cables to tension the adjusting mechanism.
- -> The ring (arrow) on retaining strap must be cut open.

Protected by copyright. Copying for private or commercial purposes, in part or in whole, is not permitted unless authorised by Volkswagen AG. Volkswagen AG does not guarantee or accept any liability with respect to the correctness of information in this document. Copyright by Volkswagen AG.

sateletronica

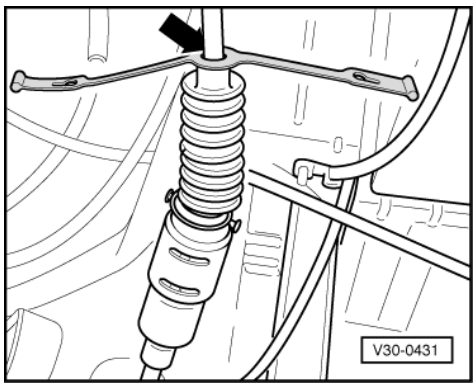

- -> Hook retaining strap eye on, above protective sleeve (arrow).

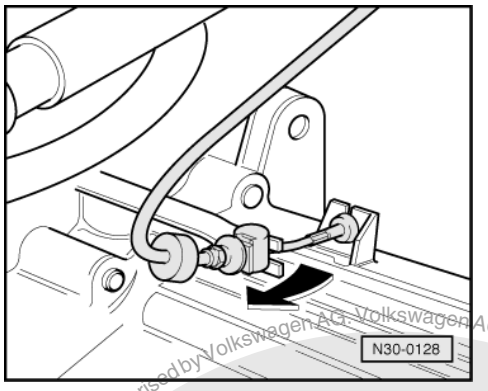

- Fully depress clutch pedal onto stop at least 5 times.
- -> Move clutch release lever approx. 10 mm, opposite direction of operation (direction of arrow). The clutch release lever must move freely.

The adjusting mechanism will be compressed.

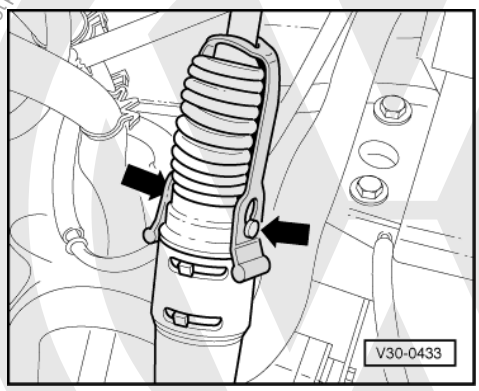

- -> Hook retaining strap tabs onto adjustment mechanism pins (arrows) (2nd mechanic) required. Unhook clutch cable at gearbox operating lever.
- Pull rubber buffer out of support on gearbox.

Protected by copyright. Copying for private or commercial purposes, in part or in whole, is not permitted unless authorised by Volkswagen AG. Volkswagen AG does not guarantee or accept any liability with respect to the correctness of information in this document. Copyright by Volkswagen AG.
satelettronica

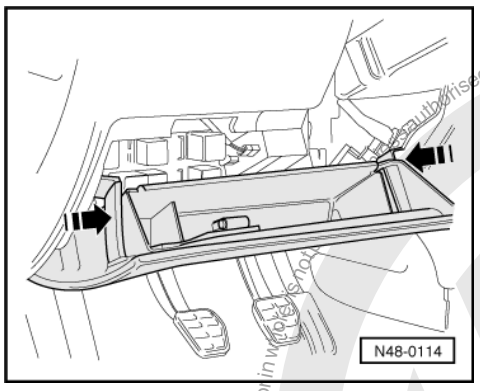

- -> Pull stowage compartment, below dash panel, out of mountings but first push stops in direction of arrow.

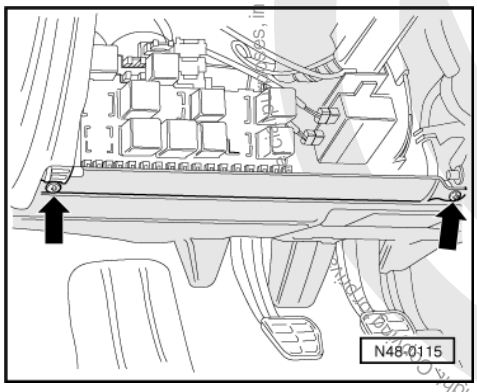

- -> Unbolt cover (arrows)
- Unhook relay plate from mountings;

Note:

Do not pull connectors off relays and wiring.

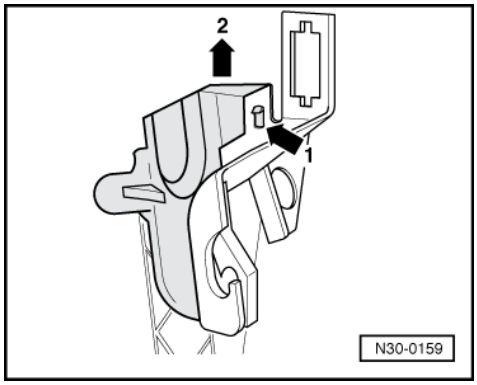

- Unhook electric wiring from mountings
- -> Remove cover for clutch pedal from mounting bracket (arrows -1- and -2-).

Unauthorised by Volkswagen AG. Volkswagen AG does not guarantee or accept any liability with respect to the correctness of information in this document. Copyright by Volkswagen AG.
Protected by copyright. Copying prohibited.
satelettronica

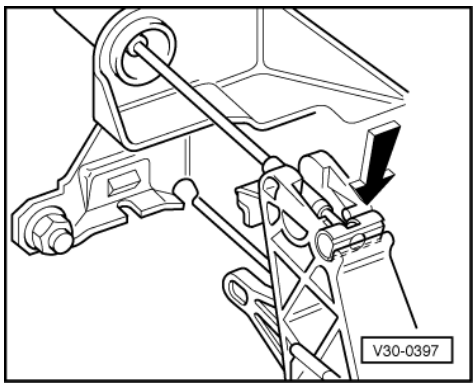

- -> Unhook clutch cable from clutch pedal (arrow).

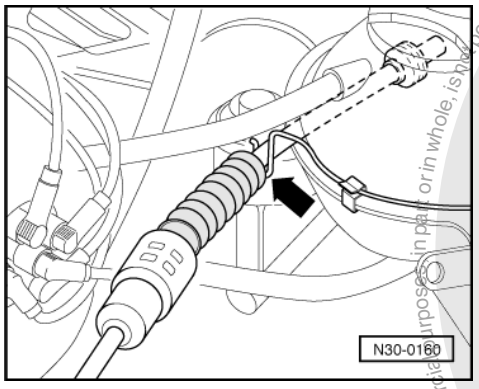

- -> Remove clutch cable from retainers (arrows).
- Take clutch pedal out.

Installing

(Clutch cable under tension)

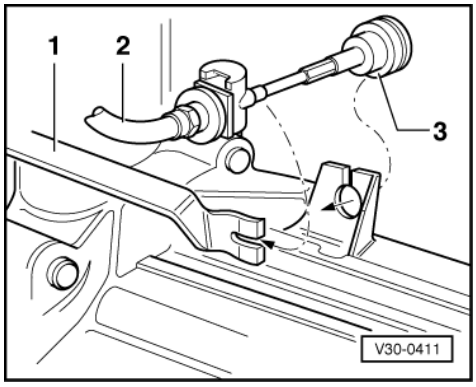

- Lubricate clutch cable clutch pedal mounting point with MoS2 grease.
- Push clutch cable through bulkhead and clip bellows in position.
- Hook clutch cable into clutch pedal.

-> Hook clutch cable onto gearbox as follows:

- Fit rubber buffer -3-.
- Pull cable sleeve -2- in normal direction of travel and insert buffer in clutch release lever -1-

Protected by copyright. Copying for private or commercial purposes, in part or in whole, is not permitted unless authorised by Volkswagen AG. Volkswagen AG does not guarantee or accept any liability with respect to the correctness of information in this document. Copyright by Volkswagen AG.
satelettronica

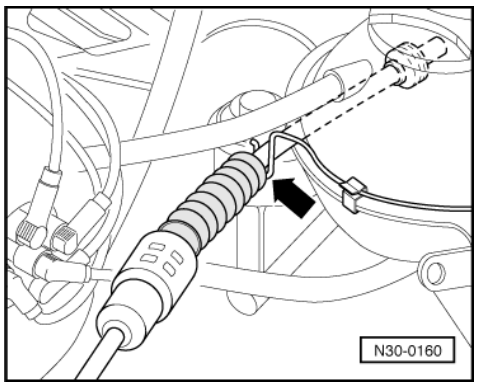

- -> Clip clutch cable into retainers (arrows).

Note:

Do not kink clutch cable when doing this. The function of the adjusting mechanism cannot otherwise be guaranteed.

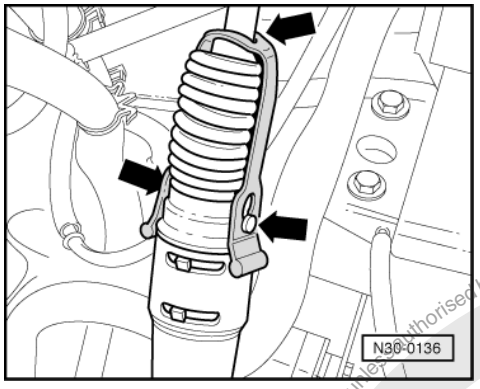

- -> After installing clutch pedal remove retaining strap (arrows).
- Check clutch cable function =>Page 19

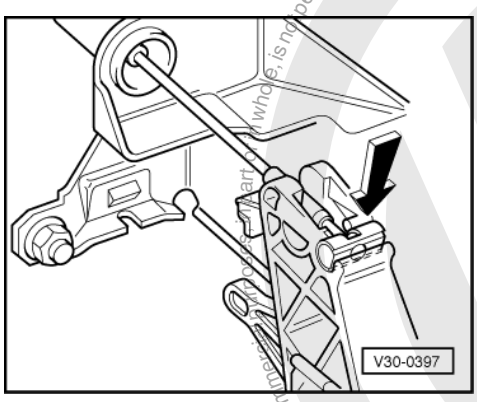

Installing

(Clutch cable not under tension)

- Lubricate clutch cable clutch pedal mounting point with MoS2 grease.
- Push clutch cable through bulkhead.
- -> Hook clutch cable into clutch pedal (arrow).

Protected by copyright. Copyright by Volkswagen AG. Volkswagen AG does not guarantee or accept any liability with respect to the correctness of information in this document. Copyright by Volkswagen AG.
satelettronica

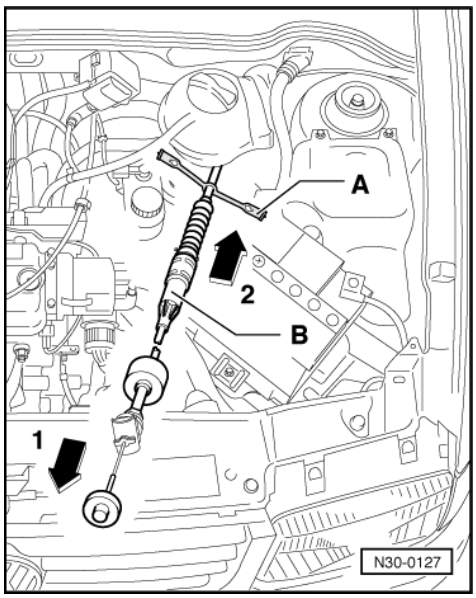

- -> Attach retaining strap -A-
- Pull end piece of cable in direction of arrow -1- and hold in this position, at the same time move the cable sleeve with the adjusting mechanism -B- to and fro several times, until it can be pressed together in direction of bulkhead (direction of arrow -2-).

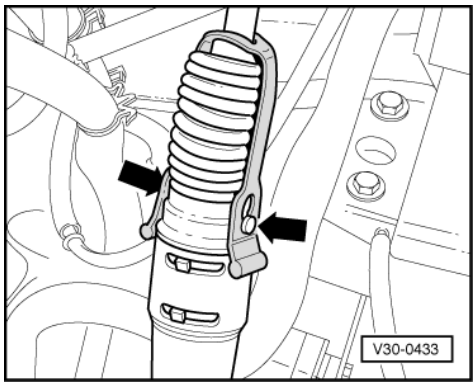

- -> Hook retaining strap tabs onto adjustment mechanism pins (arrows) (2nd mechanic) required.
- Fit bellows into bulkhead.

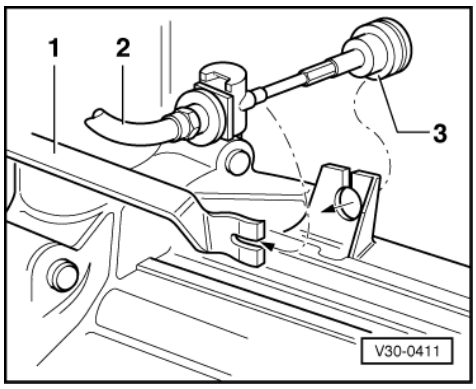

-> Hook clutch cable onto gearbox as follows:

- Fit rubber buffer -3-.
- Pull cable sleeve -2- in normal direction of travel and insert buffer in clutch release lever -1-

Protected by copyright. Copying for private or commercial purposes, in part or in whole, is not permitted unless authorised by Volkswagen AG. Volkswagen AG does not guarantee or accept any liability with respect to the correctness of information in this document. Copyright by Volkswagen AG.
satelettronica

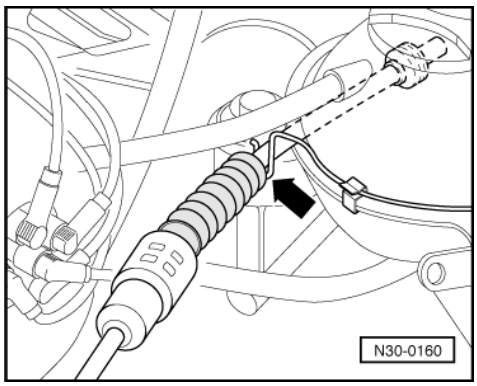

- -> Clip clutch cable into retainers (arrows).

Note:

Do not kink clutch cable when doing this. The function of the adjusting mechanism cannot otherwise be guaranteed.

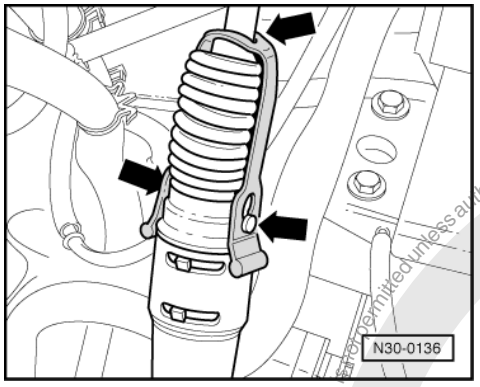

- -> After installing clutch pedal remove retaining strap (arrows).
- Check clutch cable function =>Page 19

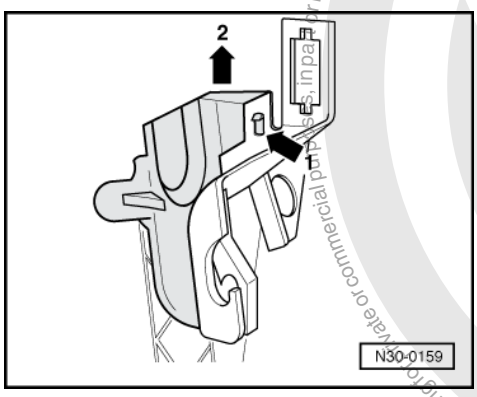

- -> Locate cover on mounting bracket (arrows -1- and -2-).
- Insert relay plate into mounting; check wiring and relay connectors and press fully home if necessary.
- Install cover and stowage compartment below dash panel.

satelettronica
Protected by copyright. Copying for private or commercial purposes, in part or in whole, is not permitted unless authorised by Volkswagen AG. Volkswagen AG does not guarantee or accept any liability with respect to the correctness of information in this document. Copyright by Volkswagen AG.

1.5 - Removing and installing clutch cable (no automatic adjustment)

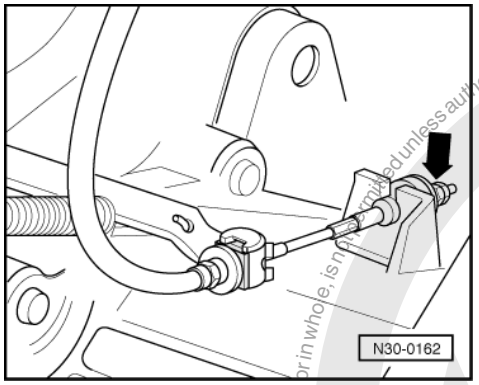

Removing

- Disconnect earth strap from battery

Note:

Note radio coding for vehicles with coded radio.

- -> Loosen lock nut and adjusting nut (arrow).
- Unhook clutch cable at gearbox operating lever.
- Pull rubber buffer out of support on gearbox.

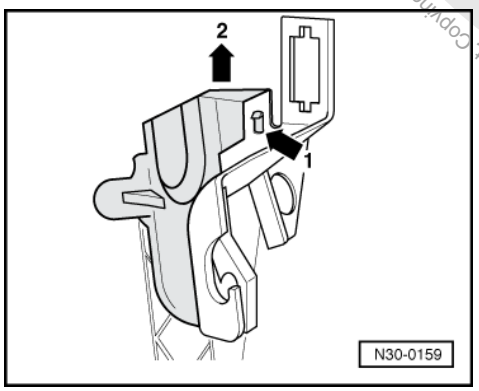

- Remove stowage compartment and cover; unhook relay plate from mountings => from Page 22 .
- -> Remove cover for clutch pedal from mounting bracket (arrows -1- and -2-).

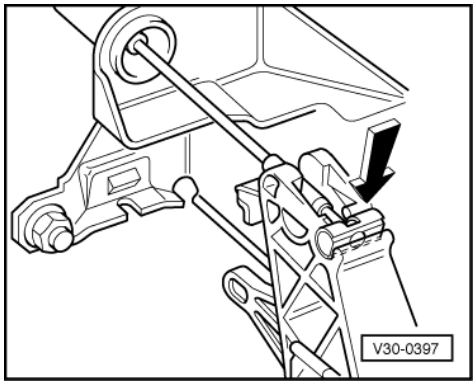

- -> Unhook clutch cable from clutch pedal (arrow).
- Take clutch cable out of bracket on expansion tank.
- Take out clutch cable.

Protected by copyright. Copying for private or commercial purposes, in part or in whole, is not permitted unless authorised by Volkswagen AG. Volkswagen AG does not guarantee or accept any liability with respect to the correctness of information in this document. Copyright by Volkswagen AG.
satelettronica

Protected by copyright. Copyright by Volkswagen AG. Volkswagen AG does not guarantee or accept any liability with respect to the correctness of information in this document. Copyright by Volkswagen AG. Reproduction, in whole or in part, for commercial purposes, is not permitted unless authorised by Volkswagen AG.

Installing

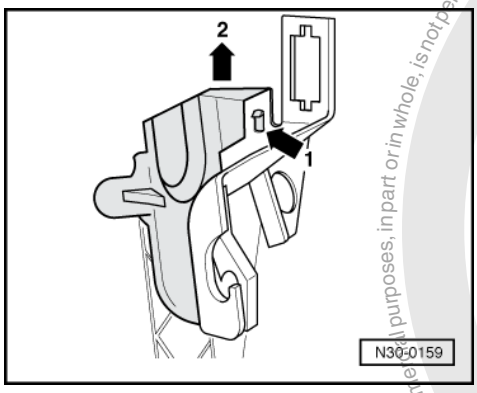

- Lubricate clutch cable clutch pedal mounting point with MoS2 grease.
- Push clutch cable through bulkhead and clip bellows in position.
- Hook clutch cable into clutch pedal.
- -> Locate cover on mounting bracket (arrows -1- and -2-).
- Insert relay plate into mounting; check wiring and relay connectors and press fully home if necessary.
- Install cover and stowage compartment below dash panel.

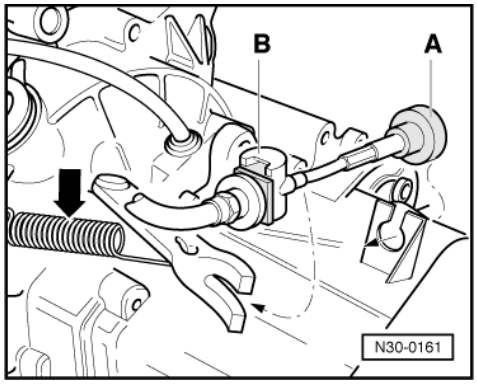

Hook clutch cable onto gearbox as follows:

- -> Press rubber buffer -A- into support.
- Attach clutch cable -B- to release lever.

Spring (arrow) must be hooked into position between release lever and gearbox.

- Push clutch cable into bracket on expansion tank.

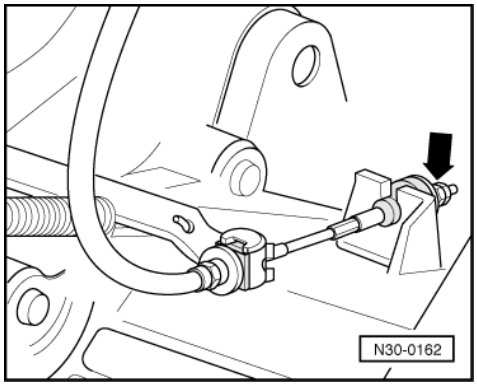

Adjusting clutch cable

- -> Loosen lock nut and adjusting nut (arrow).
- Adjust clutch via adjusting nut so that there is free play of 15 ... 20 mm at clutch pedal.

satelettronica

- Secure adjusting nut with lock nut.

Protected by copyright. Copyright by Volkswagen AG. Volkswagen AG does not guarantee or accept any liability with respect to the correctness of information in this document. Copyright by Volkswagen AG. Protected by copyright. Copying for private or commercial purposes, in part or in whole, is not permitted unless authorised by Volkswagen AG.

1.6 - Removing and installing clutch pedal

Removing

- Disconnect earth strap from battery

Note:

Note radio coding for vehicles with coded radio.

Clutches with automatic adjustment

- Depress clutch pedal several times down onto stop.
- Tension clutch cable and remove from gearbox =>Page 20 .

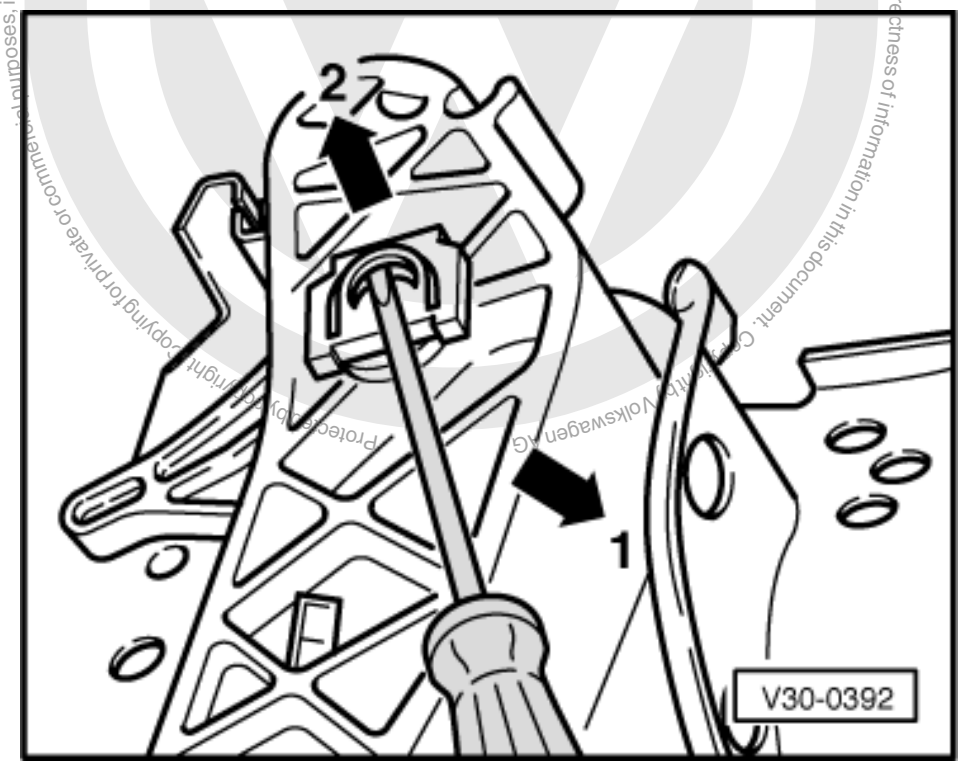

Clutches without automatic adjustment

- Disconnect clutch cable on gearbox =>Page 27 .
- -> Remove clutch pedal securing clip from pivot pin, by levering tab in direction of arrow -1- with a screwdriver then pushing off in direction of arrow -2-.

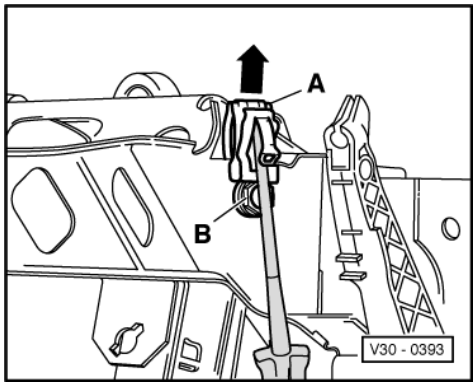

satelettronica

- -> Take brake pedal side pivot pin securing clip off towards dash panel (direction of arrow) by locating a screwdriver under the retaining clip -A-.
- Pull clutch and brake pedal pivot pin out to the right, until the clutch pedal can be removed.
- Take out clutch pedal.

Installing

- Lubricate all bearings and contact surfaces with MoS2 grease.
- Align clutch pedal/brake pedal pivot pin so that the flats -B- are vertical before fitting the brake pedal side securing clip => Illustration V30-0393.
- Fit clutch pedal onto pivot pin.
- Fit securing clips onto brake pedal end of pivot pin and onto clutch pedal end.

Clutches with automatic adjustment

- Reconnect clutch cable to gearbox => Page 23
- After installing clutch pedal check function of clutch pedal adjustment mechanism => Page 19 .

Clutches without automatic adjustment

- Reconnect clutch cable to gearbox => Page 27
- Adjusting clutch => Page 28

Protected by copyright. Copying for private or commercial purposes, in part or in whole, is not permitted unless authorised by Volkswagen AG. Volkswagen AG does not guarantee or accept any liability with respect to the correctness of information in this document. Copyright by Volkswagen AG.

satelettronica

2 - Servicing clutch release mechanism

2.1 - Servicing clutch release mechanism

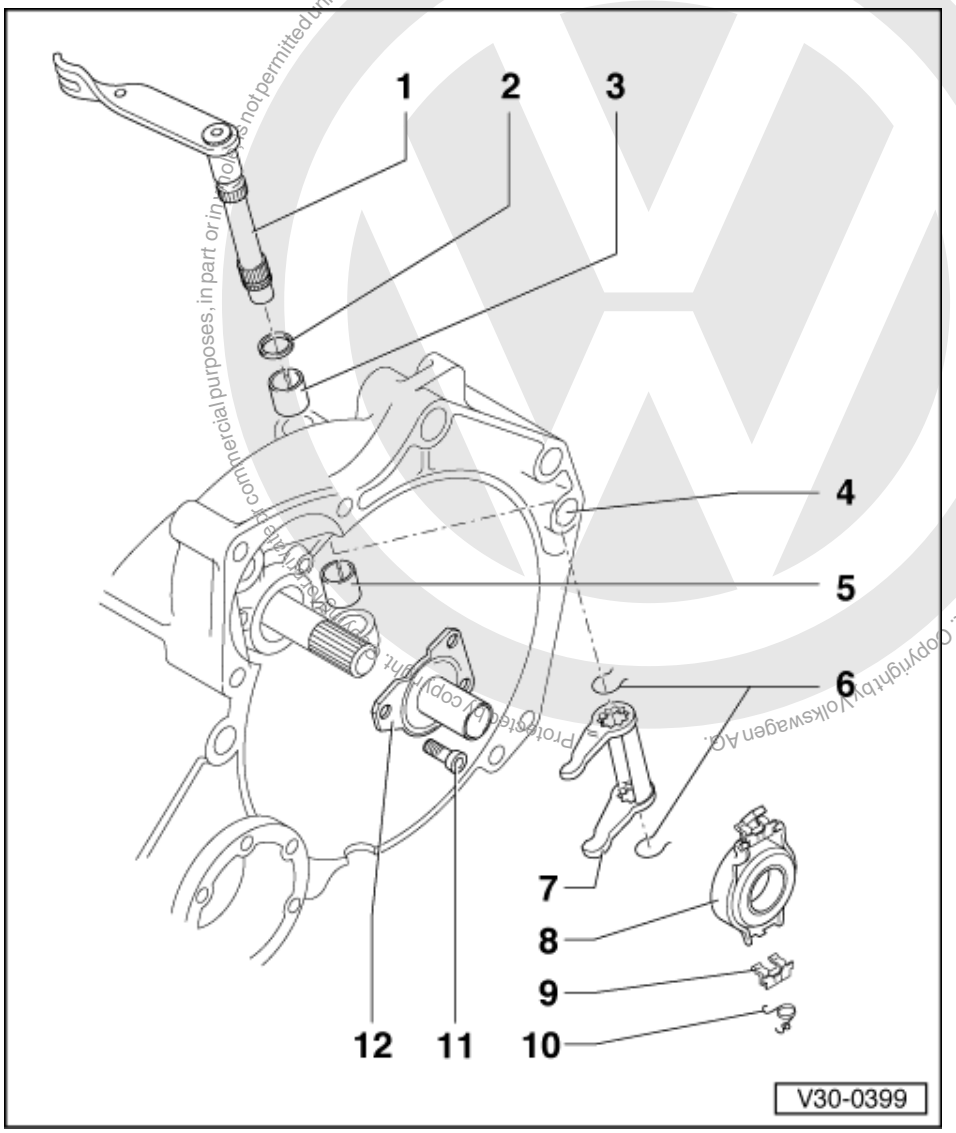

Notes:

- Remove gearbox to work on release shaft and on release bearing => Page 52
- Lubricate all bearings and contact surfaces with constant velocity grease Part No.: G000 603.

1 Release shaft with clutch lever
- Check for ease of movement
- Installation position => Fig. 6

2 Seal
- Renew
- Lever out with screwdriver
- Installing => Fig. 5

3 Mounting bush
- Removing => Fig. 1
- Installing => Fig. 4

4 Clutch housing

satelettronica

- Servicing => Page 84

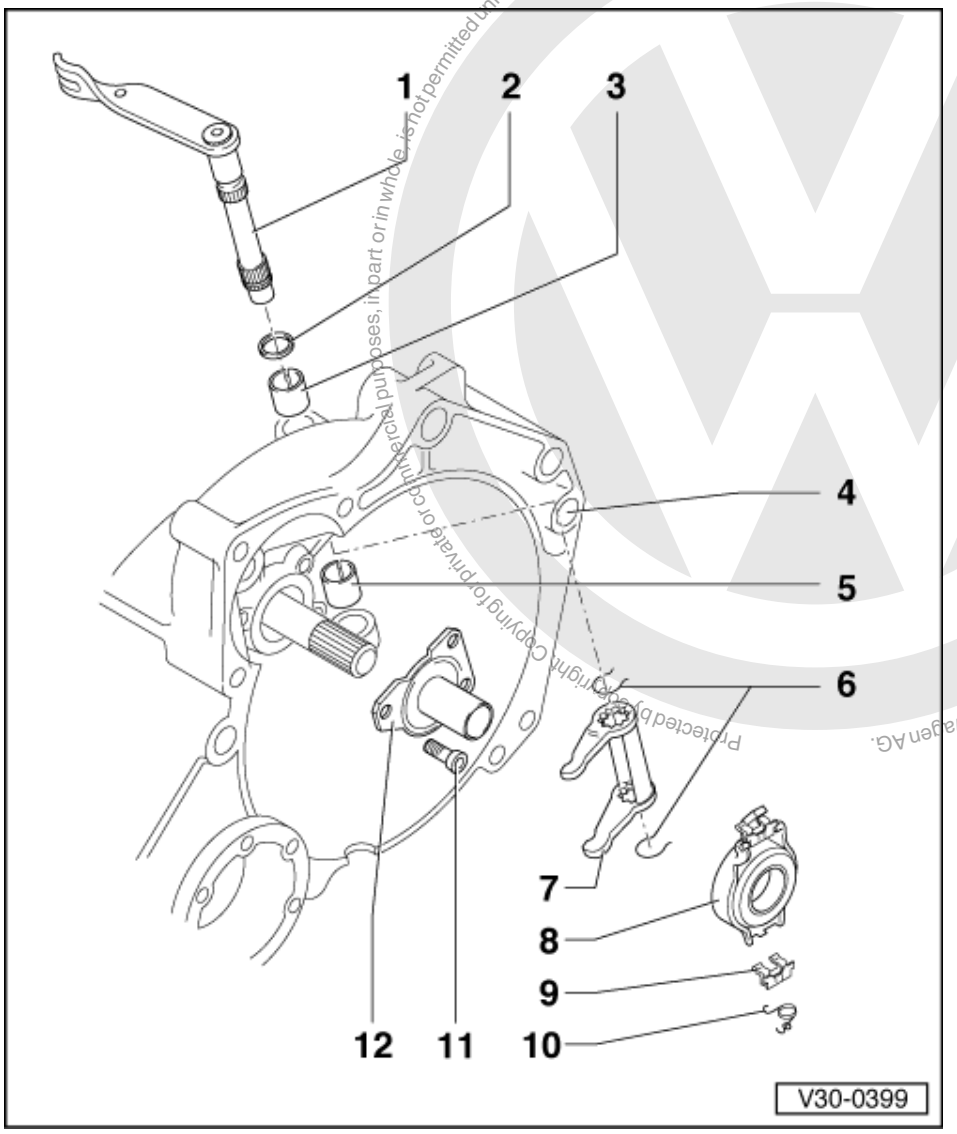

5 Mounting bush
- Removing => Fig. 2
- Installing => Fig. 3

6 Securing clip
- Lever out before removing release shaft

7 Release lever
- Install together with release shaft => Fig. 6

8 Release bearing
- Do not wash-out bearing, only wipe
- Renew noisy bearings

9 Retaining clip
- Insert onto release bearing

10 Retaining spring
- Insert into retaining clip and then insert into release fork

Protected by copyright. Copying for private or commercial purposes, in part or in whole, is not permitted unless authorised by Volkswagen AG. Volkswagen AG does not guarantee or accept any liability with respect to the correctness of information in this document. Copyright by Volkswagen AG.
satelettronica

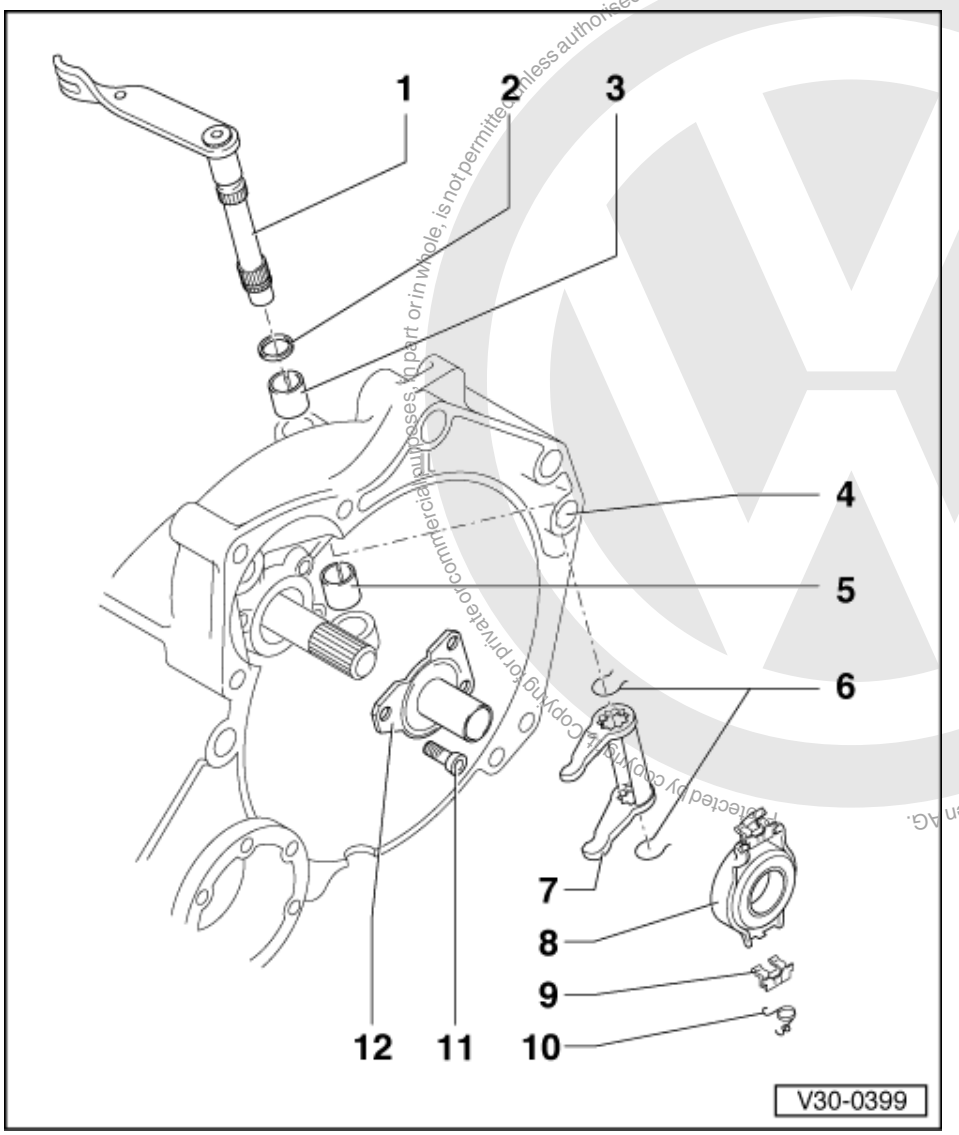

11 Bolt, 18 Nm
- Self-locking
- Always renew

12 Guide sleeve
- Grease release bearing guide

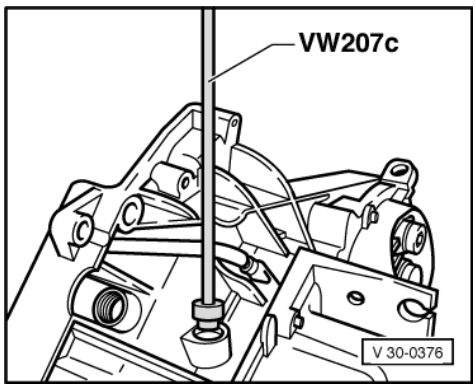

satelettronica

-> Fig.1 Driving mounting bush out

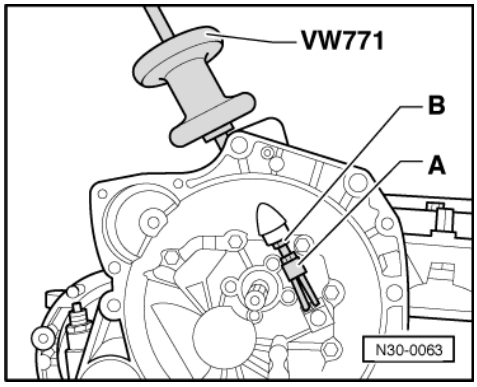

-> Fig.2 Pulling mounting bush out

A - Internal puller, e.g. Kukko 21/02, 10 ... 14 mm
B - VW 771/15 in conjunction with adapter from counter support Kukko 22/1

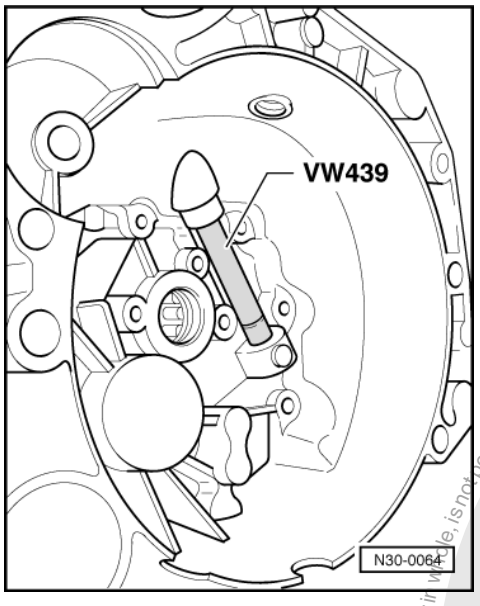

-> Fig.3 Driving mounting bush in onto stop

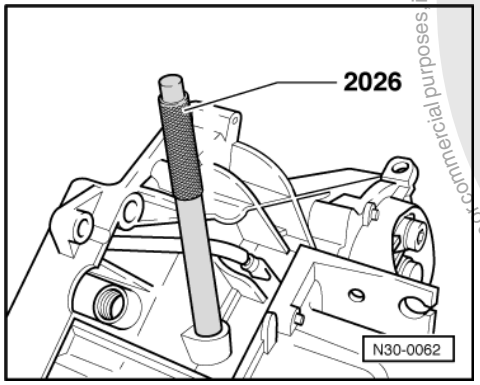

Protected by copyright. Copying for private or commercial purposes, in part or in whole, is not permitted unless authorised by Volkswagen AG. Volkswagen AG does not guarantee or accept any liability with respect to the correctness of information in this document. Copyright by Volkswagen AG.
satelettronica

-> Fig.4 Driving mounting bush in flush

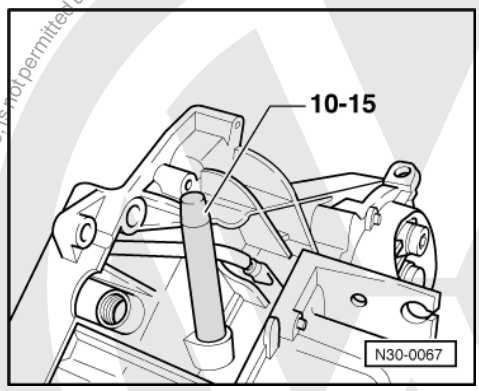

-> Fig.5 Pushing release shaft seal in onto stop

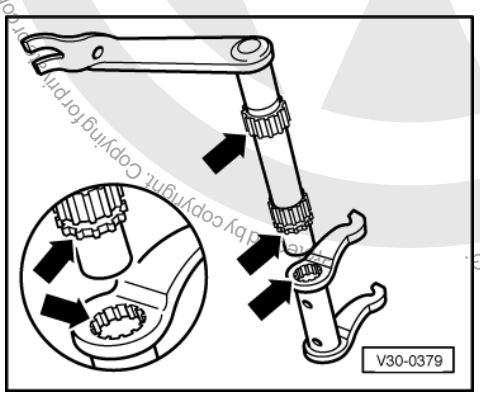

-> Fig.6 Assembling release lever with release shaft

- Insert release lever so that the groove in the spline aligns with the edge of the release lever (arrows).

Copyright by Volkswagen AG. Volkswagen AG does not guarantee or accept any liability with respect to the correctness of information in this document. Copying for private or commercial purposes, in part or in whole, is not permitted unless authorised by Volkswagen AG.
satelettronica

3 - Servicing clutch

3.1 - Servicing clutch

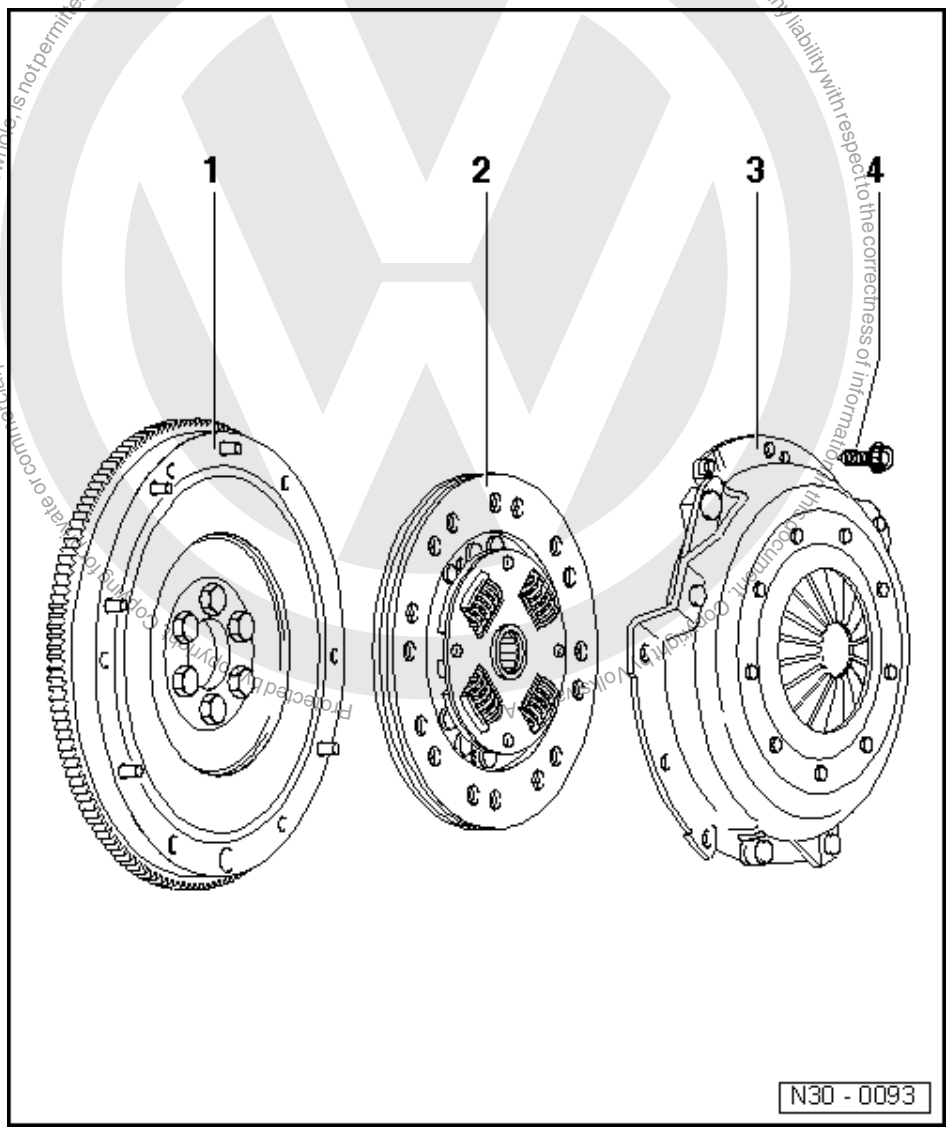

(Gearbox removed)

Notes:

- Before replacing the clutch and pressure plate note fault finding transmission No.9 - Defects on the clutch and clutch mechanism
- Replace clutch plates and pressure plates with damaged or loose rivets
- Select correct clutch plate and pressure plate according to parts list and engine code.

1 Flywheel
- Ensure centring pins are a tight fit
- Contact surface for clutch lining must be free of grooves, oil and grease
- Removing and installing

=> Repair group13; Removing and installing sealing flange and flywheel/drive plate

satelettronica

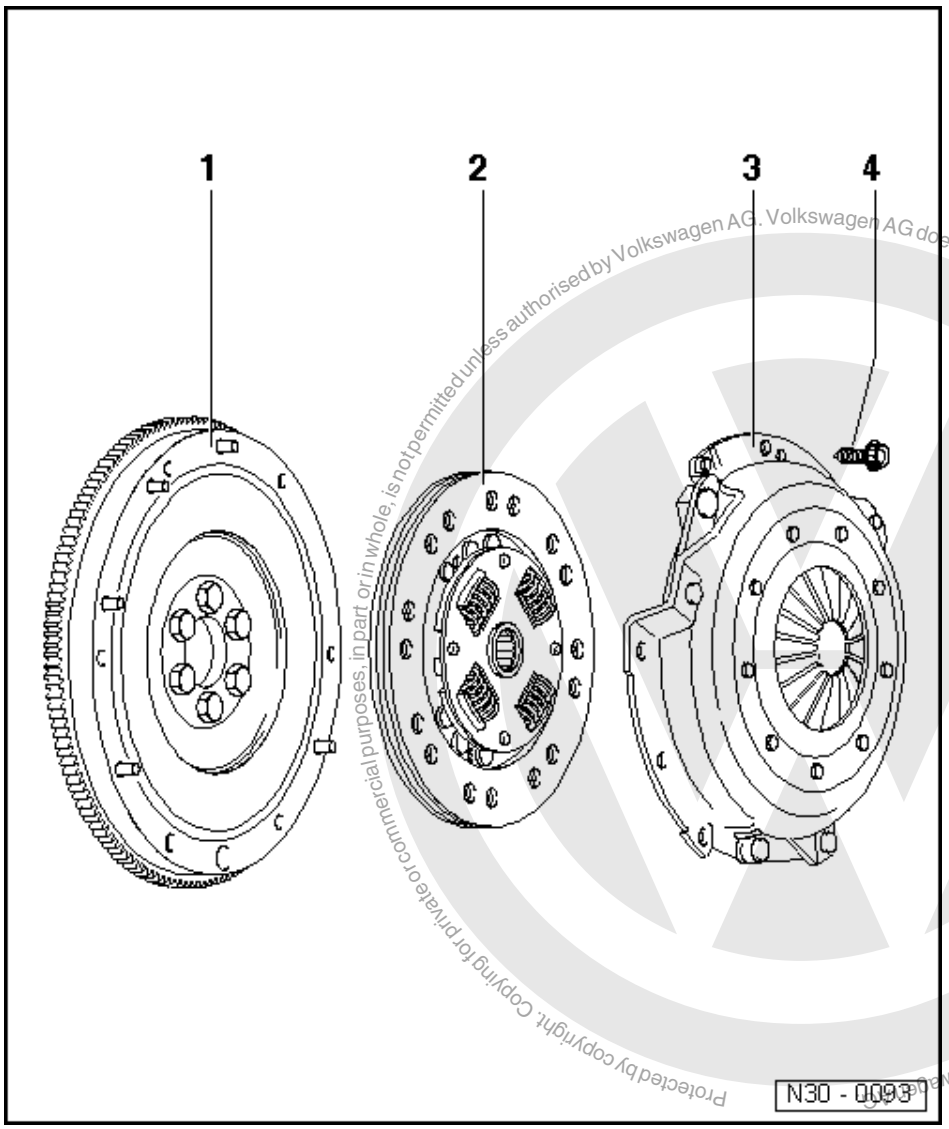

Protected by copyright. Copying for private or commercial purposes, in part or in whole, is not permitted unless authorised by Volkswagen AG. Volkswagen AG does not guarantee or accept any liability with respect to the correctness of information in this document. Copyright by Volkswagen AG.

satelettronica

2 Clutch plate

- Diameter
  =>from page 2
- Note installation position, spring cage faces to pressure plate
- Centring => Fig. 1
- Lightly grease splines

Note:

Clean input shaft splines and on used clutch plates, the hub splines, remove corrosion and apply only a very thin coating of grease Part No: G 000 100 to the input shaft splines. Then move clutch plate to and fro on input shaft until hub moves freely on shaft. Excess grease must be removed.

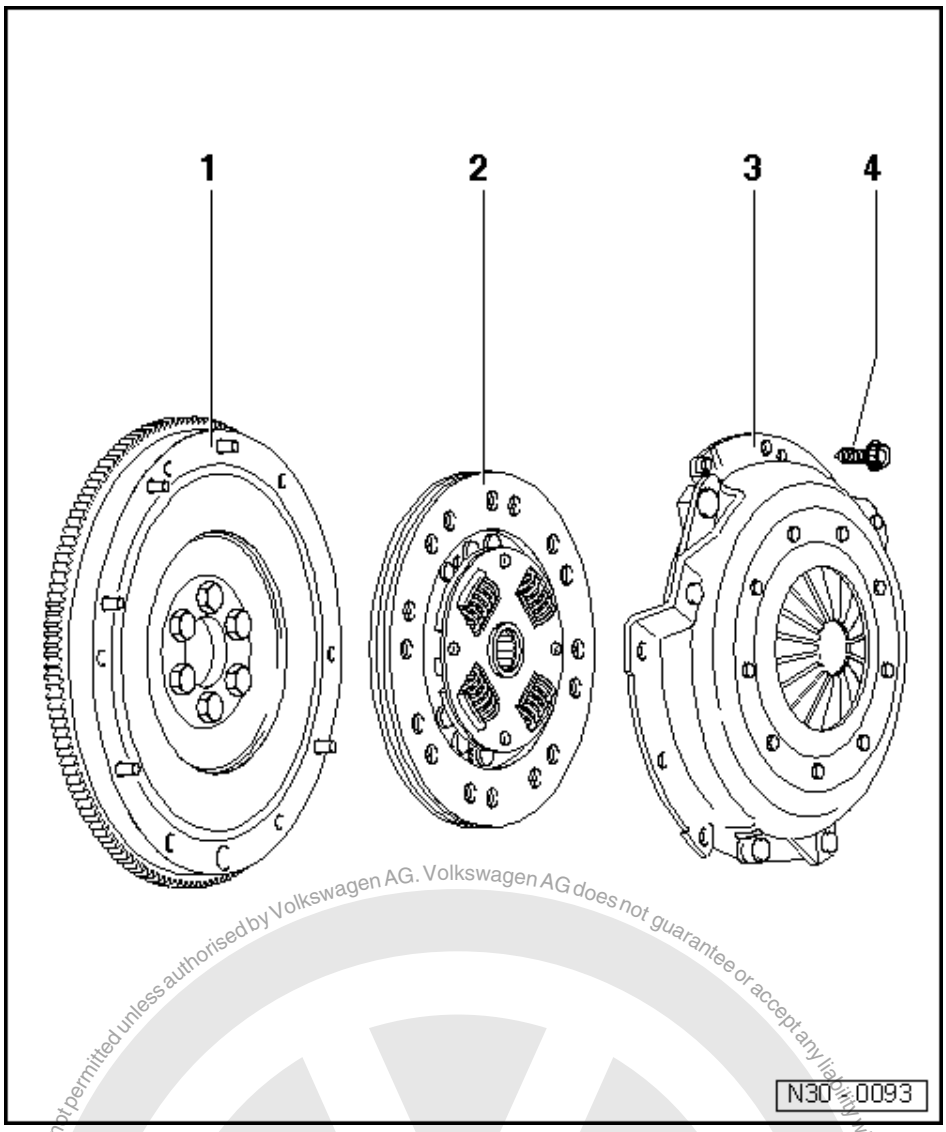

3 Pressure plate

- Removing and installing => Fig. 1
- Check ends of diaphragm spring => Fig. 2

Note:

Pressure plates are protected against corrosion and greased. Only the contact surface may be cleaned, otherwise the service life of the clutch will be considerably reduced.

4 Twelve point bolt, 20 Nm

- Loosen and tighten gradually and diagonally

Protected by copyright. Copying for private or commercial purposes, in part or in whole, is not permitted unless authorised by Volkswagen AG. Volkswagen AG does not guarantee or accept any liability with respect to the correctness of information in this document. Copyright by Volkswagen AG.
satelettronica

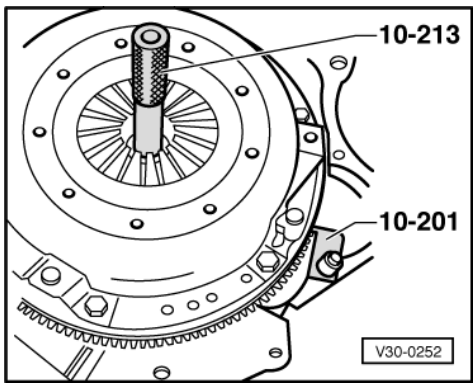

-> Fig.1 Centring clutch plate and removing and installing pressure plate

- Loosen and tighten bolts gradually and diagonally.
- Reverse position of counter-hold 10-201 when removing.

The special tool 10-213 has been superseded by 10-213 A when reordering.

Note:

Pressure plate contact surface and clutch plate must make full contact with flywheel. Tighten bolts diagonally and evenly to prevent damage to the centring holes in the pressure plate housing and the centring pins in the flywheel.

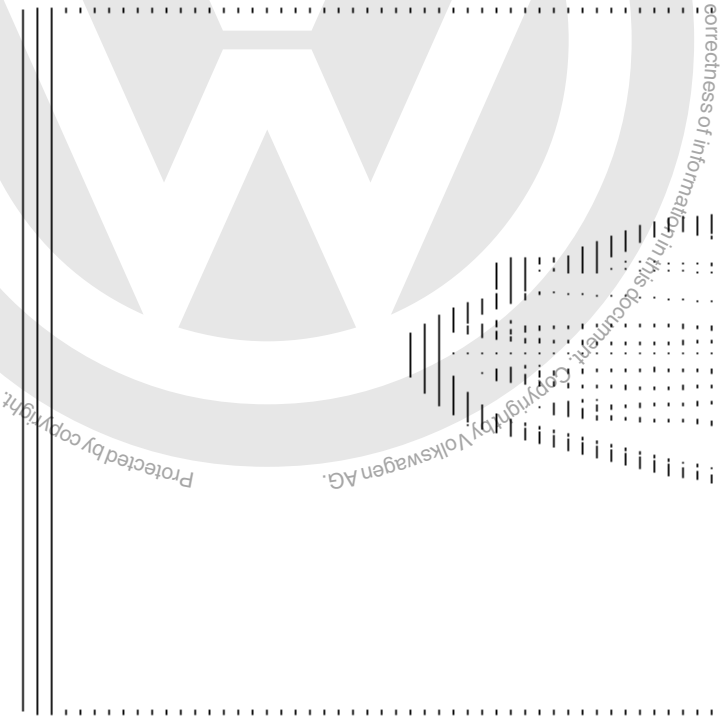

-> Fig.2 Checking ends of the diaphragm spring (arrows)

- Wear up to half the thickness of the diaphragm spring is permitted.

Protected by copyright. Copying for private or commercial purposes, in part or in whole is not permitted unless authorised by Volkswagen AG. Volkswagen AG does not guarantee or accept any liability with respect to the correctness of information in this document. Copyright by Volkswagen AG.
satelettronica

34 - Controls, Housing

1 - Servicing gear selector mechanism

1.1 - Servicing gear selector mechanism

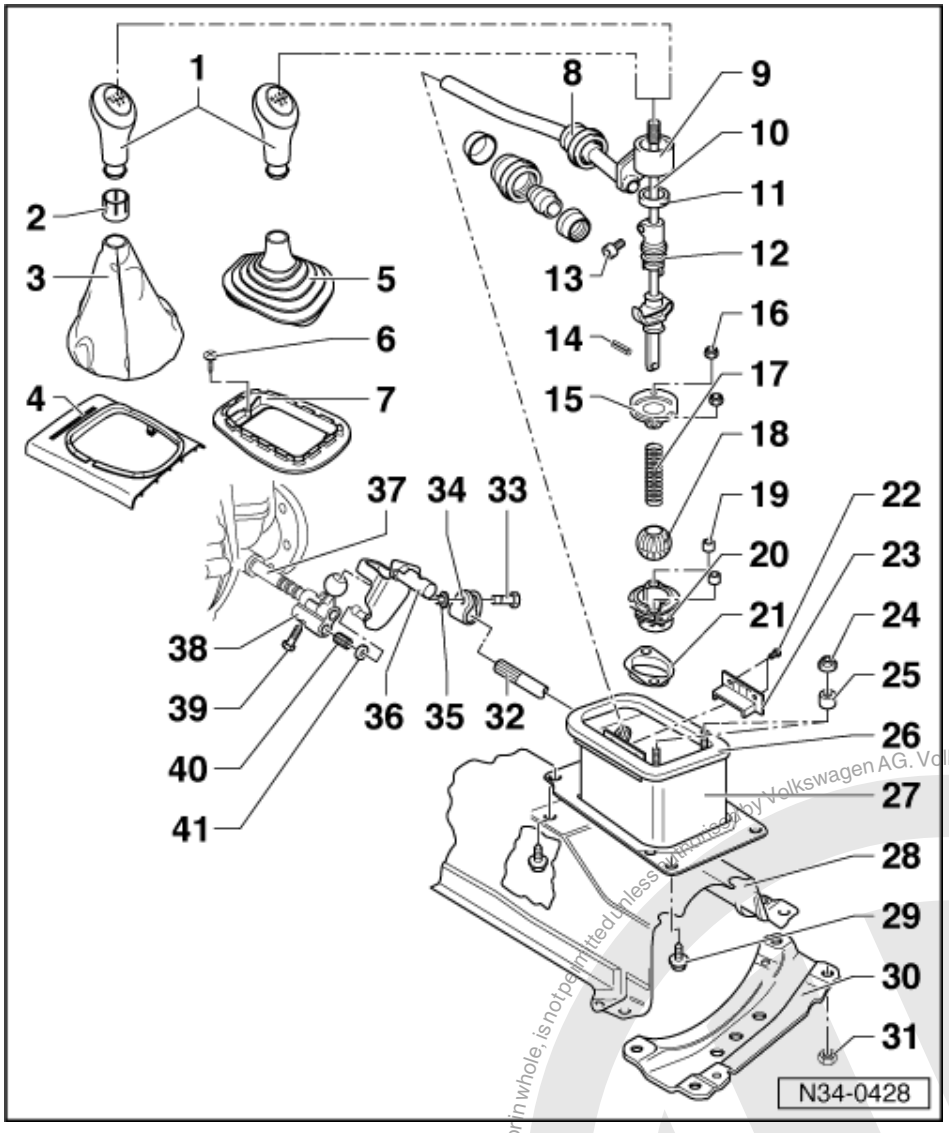

1.2 - Assembly overview

Note:
Lubricate all mountings and sliding surfaces with Polyurea grease Part No. G 052 142 A2.

1 Gear stick knob
- Allocate using parts catalogue

2 Sleeve

3 Leatherette gaiter

satelettronica
Protected by copyright. Copying for private or commercial purposes, in part or in whole, is not permitted unless authorised by Volkswagen AG. Volkswagen AG does not guarantee or accept any liability with respect to the correctness of information in this document. Copyright by Volkswagen AG.

- Pull off from frame
- Connect to gear stick knob before installing =>Page 46

4 Frame
- Pull off centre console upwards

5 Rubber cover
- Connect to gear stick knob before installing =>Page 46

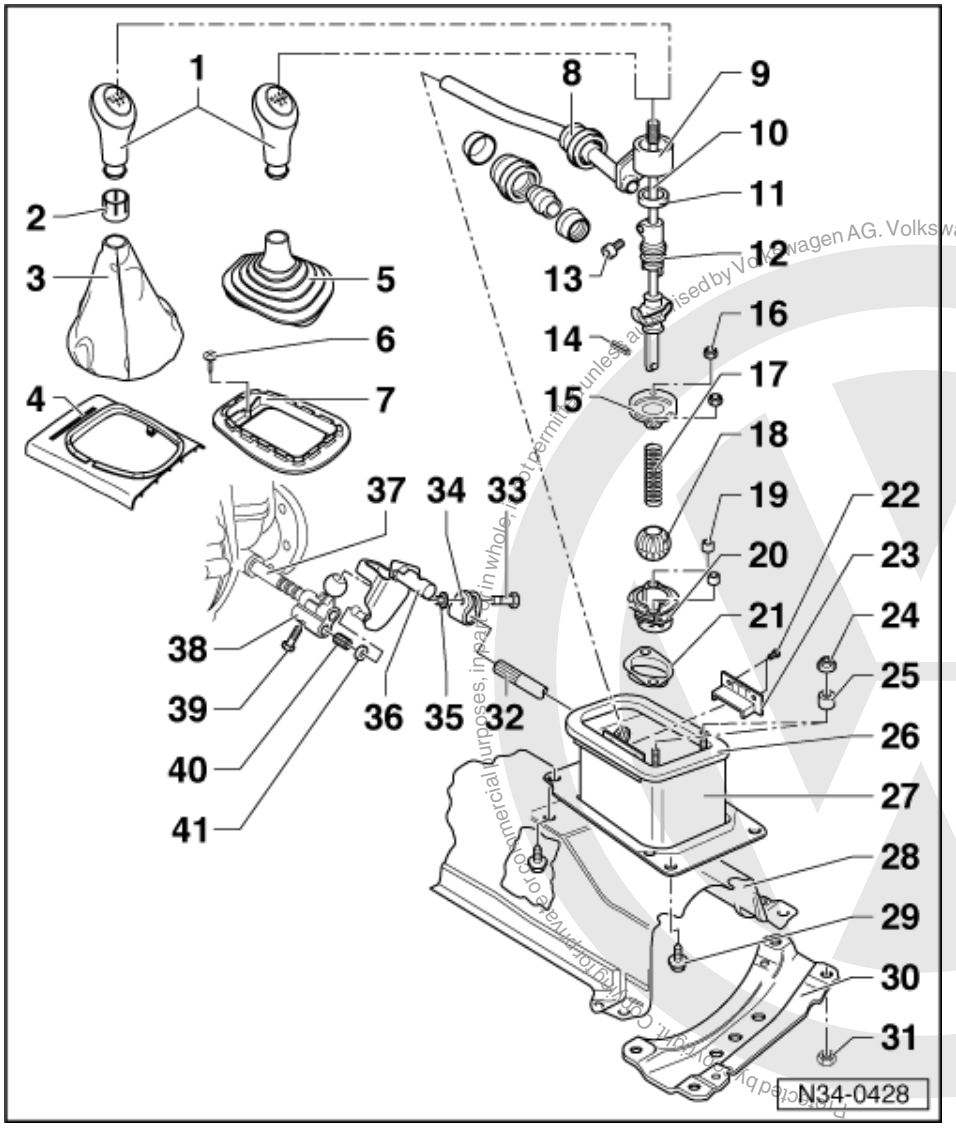

6 Bolt

7 Frame

8 Selector rod bearing
- When installing ensure that both plastic half cups are not pressed apart

9 Selector rod
- Pull with gear stick out of gear stick housing => Fig. 3
- Adjust gear selector mechanism after installing => Page 49

10 Gearbox selector lever
- Before removing, remove eccentric adjuster => Fig. 2
- Assemble before installing:
  Push on retaining plate (item 15), spring (item 17) and ball (item 18) and secure with spring pin (item 14) =>Fig. 4

satelettronica
Copyright by Volkswagen AG. Volkswagen AG does not guarantee or accept any liability with respect to the correctness of information in this document.

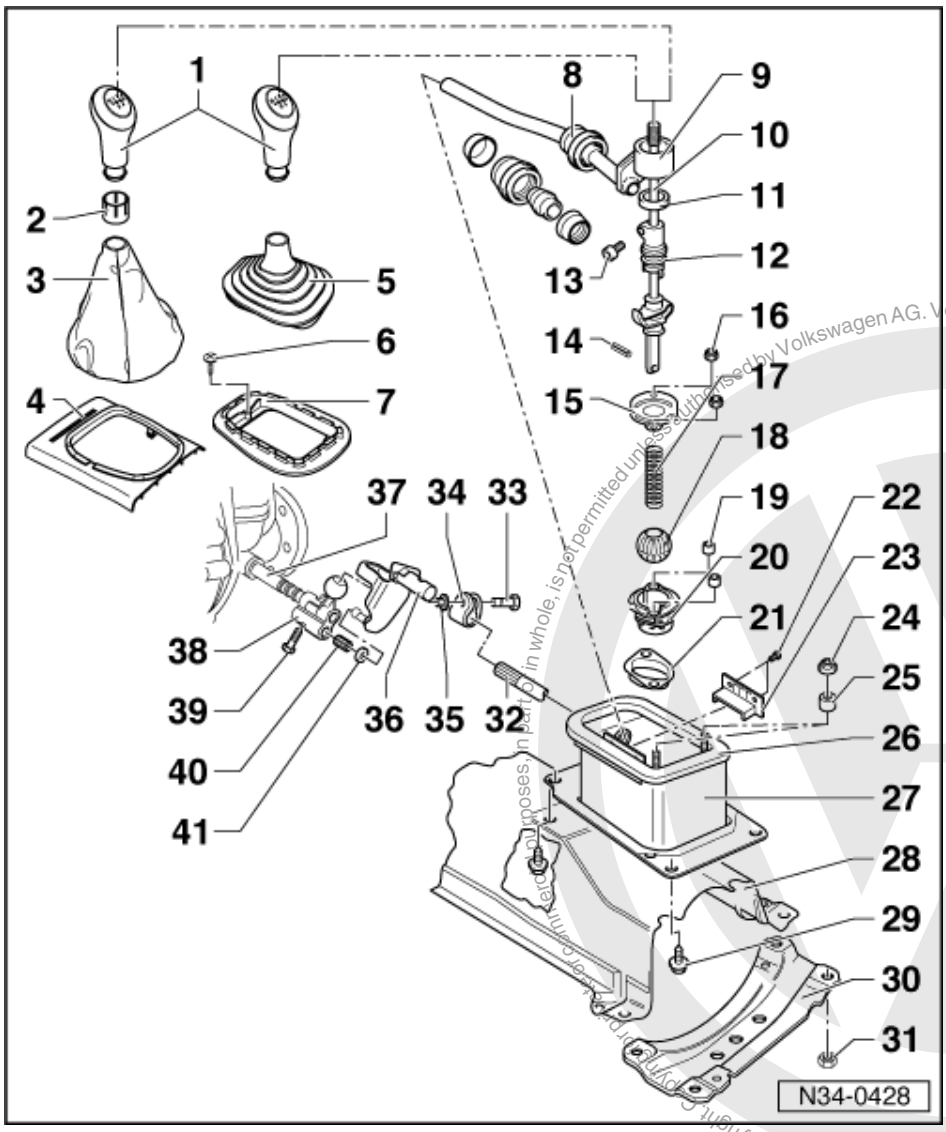

11 Synthetic ring
- Fit to eccentric adjuster

12 Eccentric adjuster
- Engage in gear stick after installing gear stick
- Removing => Fig. 2

13 Bolt, 2 Nm

14 Spring pin
- Removing and installing =>Fig. 4

15 Retaining plate
- Installation position => Fig. 1

16 Hexagon nut, 10 Nm
- Self-locking
- Always renew

17 Spring

18 Ball

19 Spacer sleeve

20 Ball housing

21 Gasket

Protected by copyright. Copyright by Volkswagen AG. Volkswagen AG does not guarantee or accept any liability with respect to the correctness of information in this document. Copyright by Volkswagen AG.
satelettronica

- For ball housing

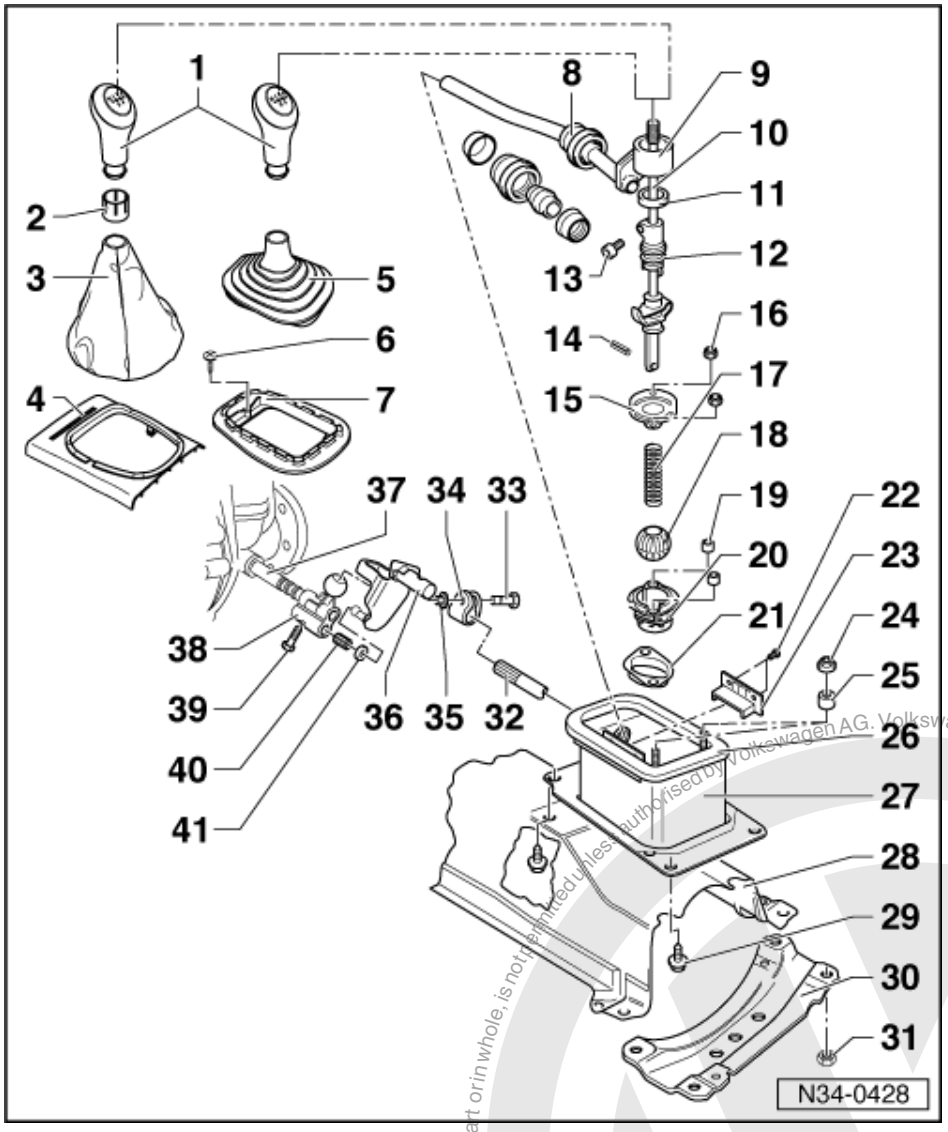

22 Rivet
- To secure stop

23 Stop

24 Plastic nut
- For console/frame (item 7) on gearstick housing
- Unscrew before removing gearstick housing

25 Spacer sleeve
- Between console and gear stick housing

26 Gasket
- Bond to gear stick housing

27 Selector housing
- Removing and installing
  => from Page 47

28 Heat shield
- Front and rear

29 Hexagon bolt, 20 Nm
- Gear stick housing to body

30 Cross member

satelettronica
Protected by copyright. Copying for private or commercial purposes, in part or in whole, is not permitted unless authorised by Volkswagen AG. Volkswagen AG does not guarantee or accept any liability with respect to the correctness of information in this document. Copyright by Volkswagen AG.

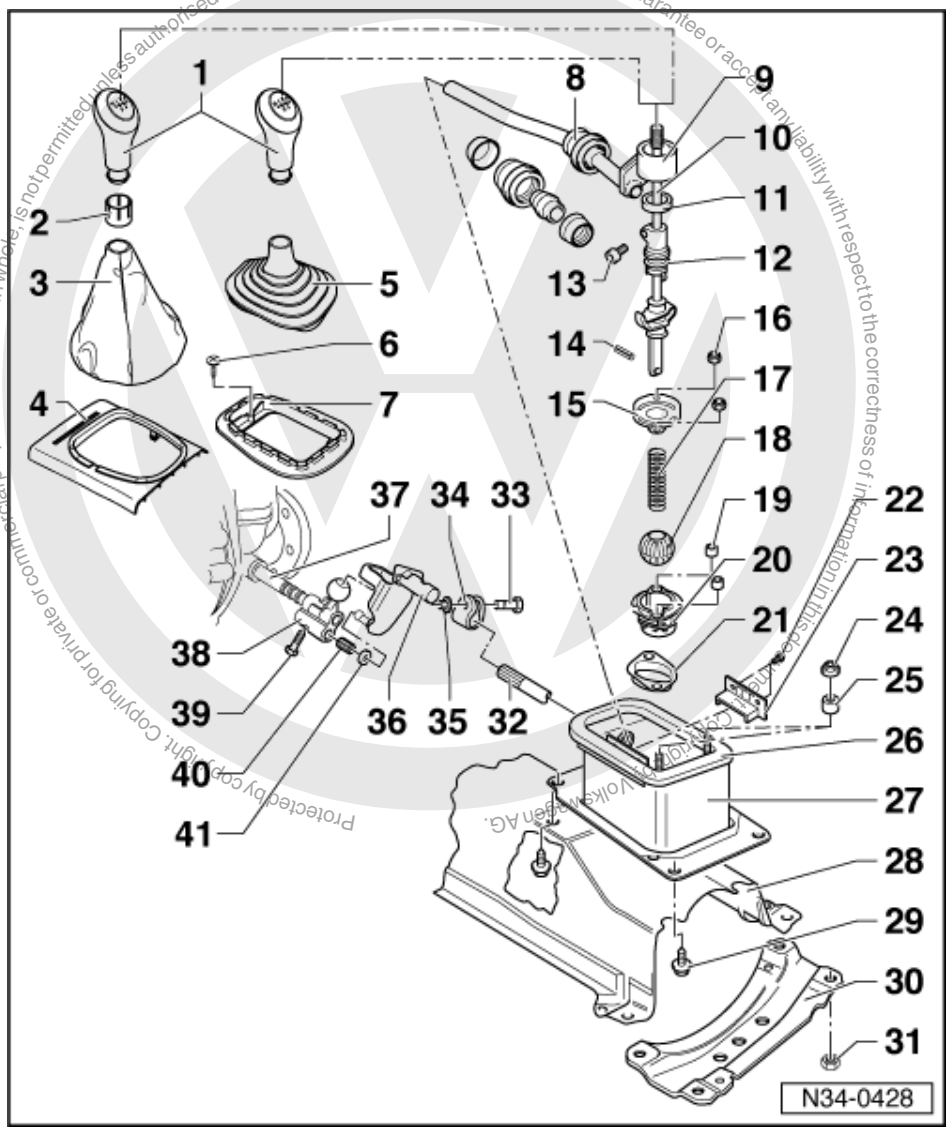

31 Self-locking hexagon nut, 15 Nm
32 Selector rod
33 Bolt
34 Clamp
- Loosen to remove selector rods

35 Hexagon nut, 20 Nm
- After installing adjust gear selector mechanism => Page 49

36 Angle finger
37 Selector shaft
38 Selector finger
- Clean hole threads

39 Hexagon bolt, 20 Nm
- Always renew
- Pre-treated with locking solution

40 Mounting bush
41 Gasket

satelettronica

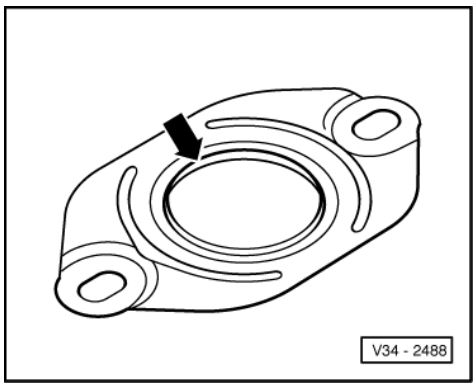

-> Fig.1 Retaining plate installation position

The circumferential shoulder (arrow) is located opposite ball (item 42 .

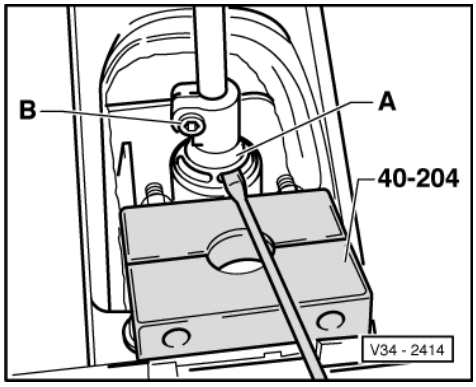

-> Fig.2 Removing eccentric adjuster

- Loosen bolt -B- and lever eccentric adjuster -A- carefully off lower part.

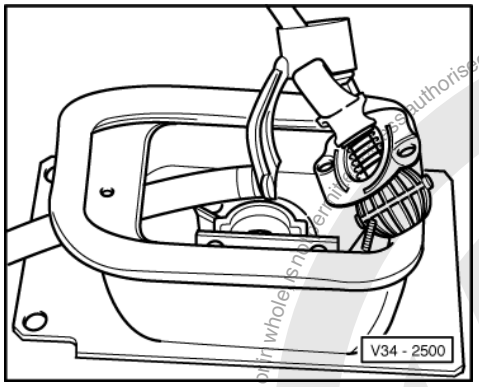

-> Fig.3 Pulling gear selector rod with gear stick lever out from gear stick housing

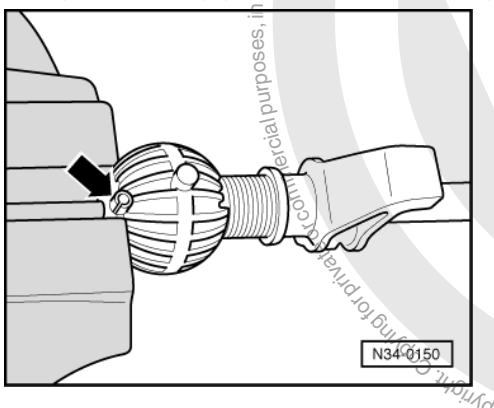

Protected by copyright. Copying for private or commercial purposes, in part or in whole is not permitted unless authorised by Volkswagen AG. Volkswagen AG does not guarantee or accept any liability with respect to the correctness of information in this document. Copyright by Volkswagen AG.
satelettronica

-> Fig.4 Removing and installing spring pin

- Tension gear stick in a vice as shown.
- Drive spring pin (arrow) in and out with drift.

1.3 - Installing gear stick gaiter to gear stick knob

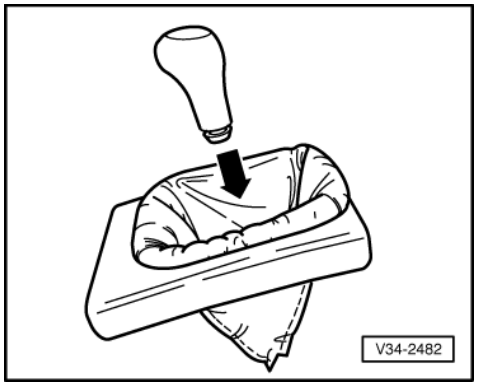

◆ Rubber boot

- Engage with gear stick knob

◆ Leatherette gaiter

- Turn cover inside out.
- -> Insert gear stick knob in gaiter (arrow).

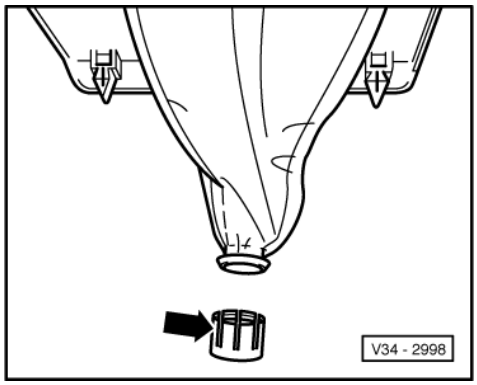

- -> Secure gaiter on gear stick knob with sleeve (arrow).
- Install gear stick knob and gaiter together.

satelettronica
Protected by copyright. Copying for private or commercial purposes, in part or in whole, is not permitted unless authorised by Volkswagen AG. Volkswagen AG does not guarantee or accept any liability with respect to the correctness of information in this document. Copyright by Volkswagen AG.

1.4 - Removing and installing selector mechanism complete

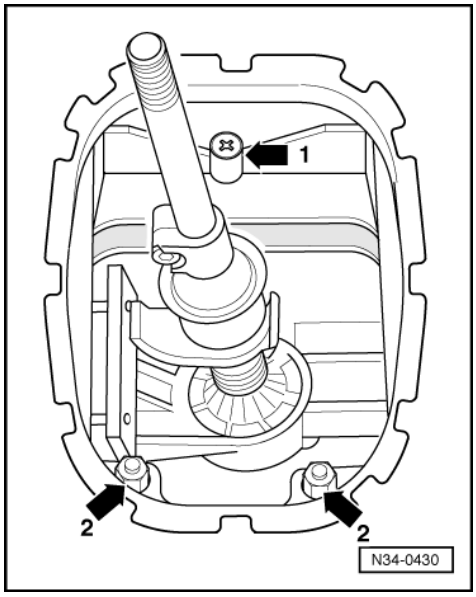

Removing

Vehicles with rubber cover:

- Detach rubber cover from frame.
- Unscrew gearstick knob together with rubber cover from gearstick.
- -> Unscrew cross-head screw (arrow 1).
- Unscrew securing nuts for frame/gearstick housing (arrows 2).

Vehicles with leatherette gaiter:

- Pull leatherette gaiter off frame.

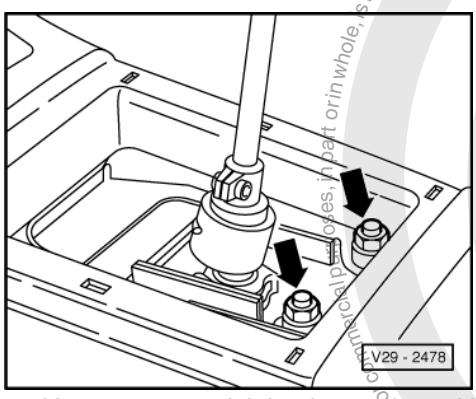

- Unscrew gearstick knob together with leatherette gaiter from gearstick.
- Lever frame off console.
- -> Unscrew securing nuts (arrows) for centre console/gearstick housing.

- Remove Lambda probe from front exhaust pipe if fitted.

Protected by copyright. Copying for private or commercial purposes, in part or in whole, is not permitted unless authorised by Volkswagen AG. Volkswagen AG does not guarantee or accept any liability with respect to the correctness of information in this document. Copyright by Volkswagen AG.
satelettronica

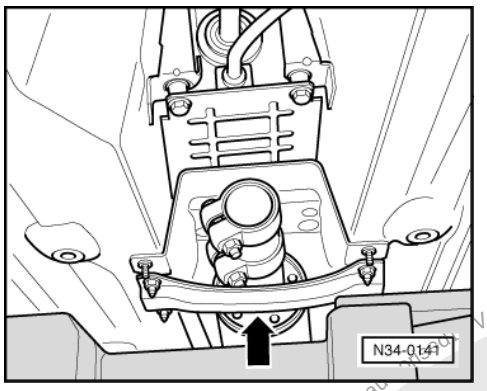

- Removing front exhaust pipe.

=> Repair group 26; Removing and installing parts of exhaust system. Removing and installing parts of exhaust system.

- -> Remove front cross support (arrow), below the exhaust system.

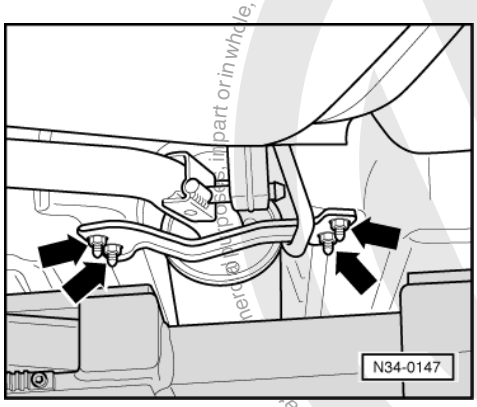

- -> Remove rear cross member (arrows).
- Remove front and rear protective plate.
- Detach exhaust system from mounting and support.

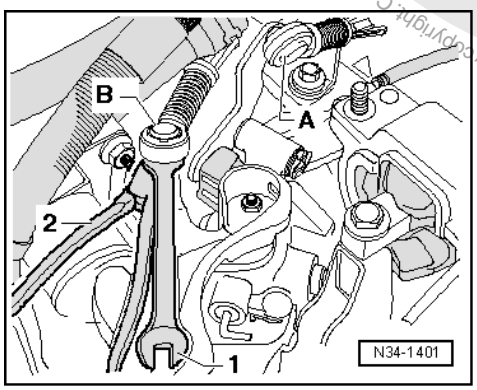

- -> Loosen clamp (arrow) and separate the selector rod/angle finger connection.
- Unbolt selector mechanism housing from body and take out downwards along with selector rods.

Protected by Copyright. Copyright by Volkswagen AG. Volkswagen AG does not guarantee or accept any liability with respect to the correctness of information in this document. Copyright by Volkswagen AG.
satelettronica

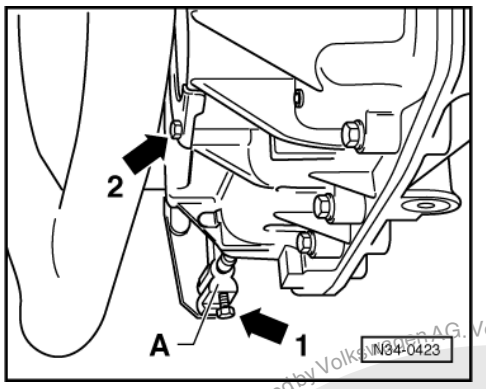

- -> Remove selector finger -A- by loosening bolt (arrow 1).

Installing

Install in reverse order.

- Clean threaded hole in selector finger with M8 tap.

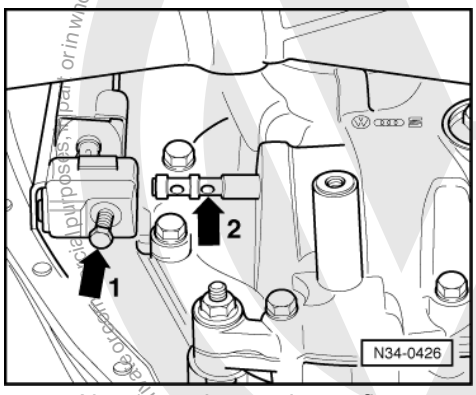

- -> Always replace selector finger securing bolt (arrow 1). The bolt is to be pre-treated with locking fluid.
- Push selector finger onto inner selector finger so far as to allow the securing bolt (arrow 1) to fit into the forward recess on the selector lever (arrow 2).
- Adjusting gear change linkage => Page 49 .

Tightening torque

Selector finger -A- to gearbox (arrow1)	20 Nm
Gear stick housing to body	25 Nm

1.5 - Adjusting gear selector mechanism

Notes:

The following points are essential to ensure correct selector adjustment:

- Moving parts of selector mechanism and transmission elements must be in proper condition.

Protected by copyright. Copyright by Volkswagen AG. Volkswagen AG does not guarantee or accept any liability with respect to the correctness of information in this document. Copyright by Volkswagen AG. Reproduction in whole or in part is not permitted unless authorised by Volkswagen AG.
satelettronica

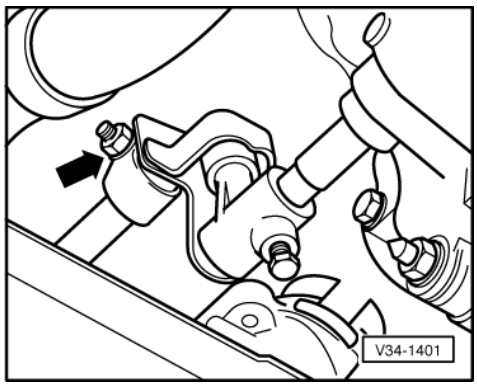

◆ Selector mechanism must move freely.

The gearbox, clutch and clutch mechanism must also be in proper condition.

- -> Loosen clamp (arrow). The selector rod/angle finger connection must move easily.

Note:

- Move the selector rod to and fro several times in the angle finger to ensure that it moves easily.

Vehicles with rubber cover:

- Remove rubber cover together with gearstick knob.
- Remove frame => Page 47

Vehicles with leatherette gaiter:

- Pull off leatherette gaiter and frame.

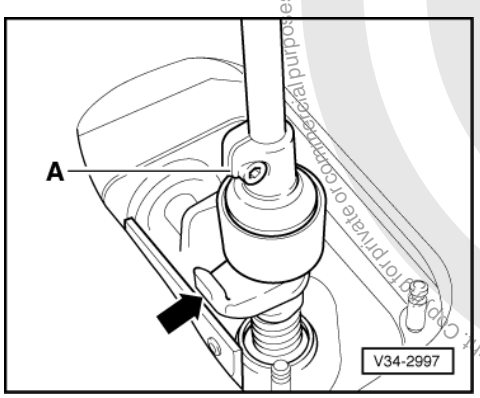

- -> The eccentric adjuster on gear stick must be so aligned that the clamp -A- faces to reverse gear hook (arrow).

• Gearbox in neutral position.

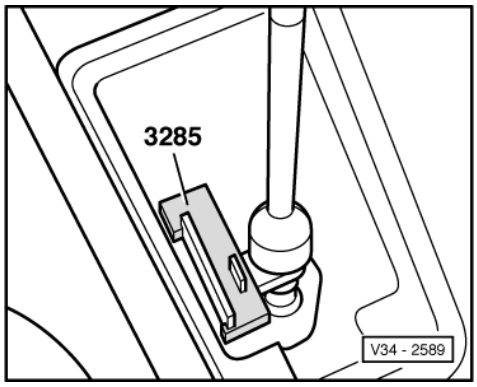

Copyright by Volkswagen AG. Volkswagen AG does not guarantee or accept any liability with respect to the correctness of information in this document. Copyright by Volkswagen AG. Copying for private or commercial purposes, in part or in whole, is not permitted unless authorised by Volkswagen AG. Volkswagen AG does not guarantee or accept any liability with respect to the correctness of information in this document. Copyright by Volkswagen AG.
satelettronica

- -> Insert gear stick jig.
- Jig must not stick.
- Then align selector rod and angle finger stress-free.

Note:

- Please ensure that the gearbox is not in gear (neutral position).

- Tighten clamp (arrow => Fig. V34-1401, Page 49) and remove gear stick jig.

Tightening torque

Clamp for selector rod	25 Nm

Functional check

- The gear stick lever must rest in the 3rd/4th gear gate with gearbox in neutral.

- Operate clutch.
- Select all gears several times. Pay particular attention to the operation of the reverse gear lock.

Should a gear fail to engage smoothly after repeated selection, then continue as follows:

- Engage 1st gear.

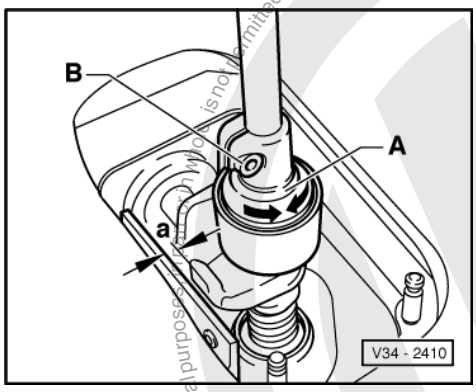

- Remove play from selector mechanism by carefully pushing gear stick to the left.

- -> Distance between gear stick limit stop and gear stick housing = 0.5 mm to 1.5 mm (dimension "a").

- Should this not be the case, carry out fine adjustment with 1st gear selected =>Page 51 .

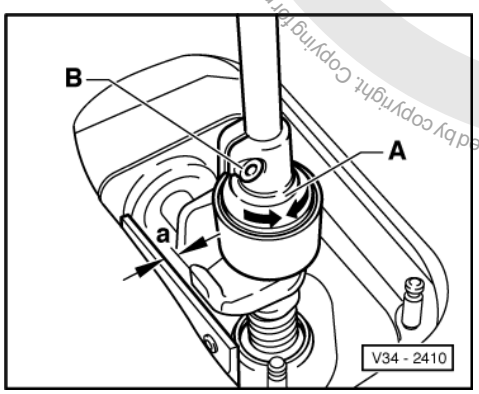

Fine adjustment

- 1st gear selected.

satelettronica

- -> Loosen clamp bolt -B-.

• Distance between gear stick stop and gear stick housing = 0.5 mm to 1.5 mm (dimension "a").

- Set to dimension -a- by turning the adjustment eccentric -A-.
- Tighten clamp bolt -B-.

Vehicles with a rubber boot:

- Install frame.
- Install rubber boot together with gearstick knob.

Vehicles with a leatherette boot:

- Press frame on.
- Pull leatherette boot on over frame.

Tightening torque

Eccentric clamping bolt	2 Nm

2 - Removing and installing gearbox

2.1 - Removing and installing gearbox

Removing

- Disconnect earth strap from battery

Note:

Note radio coding for vehicles with coded radio.

Clutches with automatic adjustment

- Unhook clutch cable at gearbox
  =>Page 20 .

Clutches without automatic adjustment

- Unhook clutch cable at gearbox
  =>Page 27 .

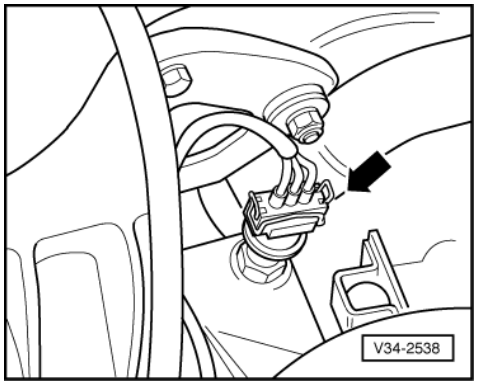

- -> Pull connector off road speed sender (arrow).

- Unbolt earth wire.
- Remove lower ribbed belt guard/engine.

Protected by copyright. Copyright by Volkswagen AG. Volkswagen AG does not guarantee or accept any liability with respect to the correctness of information in this document. Copyright by Volkswagen AG. Copying for private or commercial purposes, in part or in whole, is not permitted unless authorised by Volkswagen AG.
satelettronica

- Remove insulation tray below engine/gearbox, if fitted.

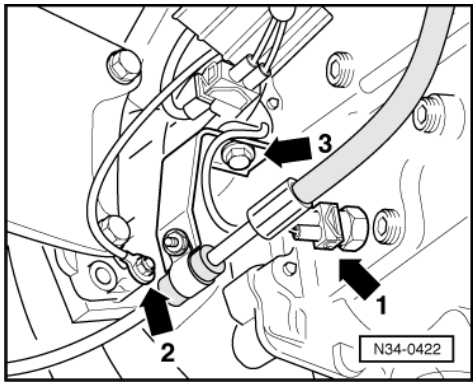

- -> Pull off reversing light connector (arrow 1).
- Remove power assisted steering line bracket from gearbox (arrow 3), while simultaneously removing connector bracket.
- Unbolt earth wire (arrow 2)

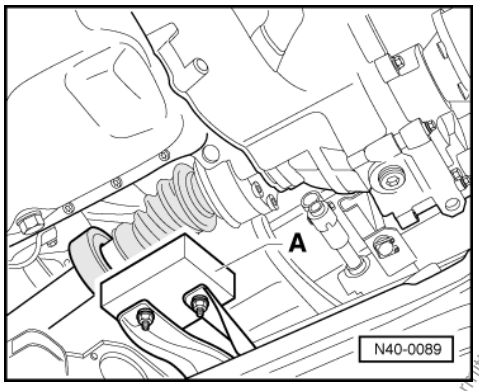

- -> Remove vibration damper -A- from sub-frame. Mark installation position.
- Disconnect drive shafts from flanged shafts, turn steering to full left lock.
- Tie-up left-hand drive shaft as high as possible.
- When doing this do not damage surface protection.

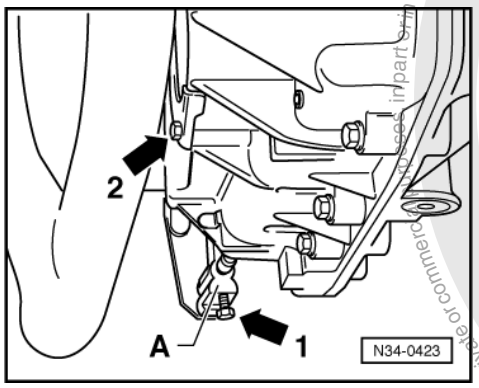

- -> Remove selector finger -A- by loosening bolt (arrow 1).
- Remove flywheel cover plate (arrow 2).
- Remove bracket for exhaust system. To do this remove one gearbox/starter bolt and one engine/gearbox bolt as well as loosening the exhaust system connection.
- Remove starter upper bolt, pull starter out and tie-up.

satelettronica
Protected by copyright. Copying for private or commercial purposes, in part or in whole, is not permitted unless authorised by Volkswagen AG. Volkswagen AG does not guarantee or accept any liability with respect to the correctness of information in this document. Copyright by Volkswagen AG.

For vehicles with an oval air cleaner:

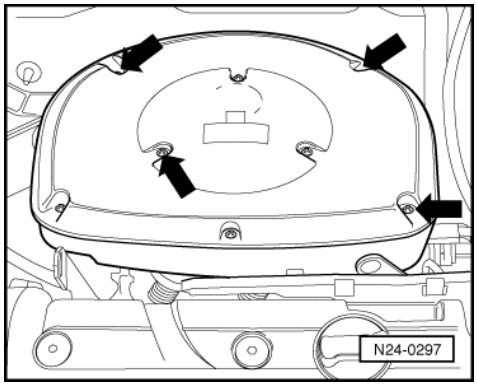

- -> Remove securing bolts (arrows), pull off upwards and place down to rear.

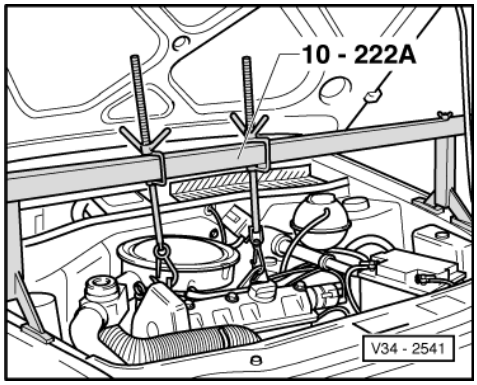

- -> Fit support bar 10-222A together with legs 10-222 A/1.

Note:

Before fitting the support hooks of the support bar, remove hose and wire connections from engine in the area of the lifting eyes, so that they are not damaged.

- Take weight of engine/gearbox assembly on the spindles.
- Remove engine/gearbox upper securing bolts.

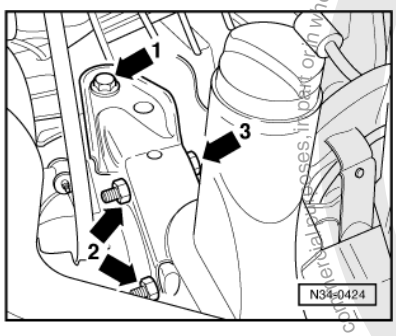

- -> Remove left-hand gearbox support. To do this, remove bolt (arrow 1) and nuts (arrow 2). Pull bolts (arrow 3) out to side.

Protected by copyright. Copying for private or commercial purposes, in part or in whole is not permitted unless authorised by Volkswagen AG. Volkswagen AG does not guarantee or accept any liability with respect to the correctness of information in this document. Copyright by Volkswagen AG.
satelettronica

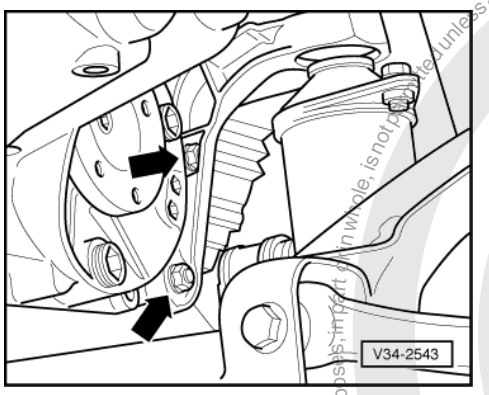

- -> Remove console securing bolts (arrows).

- Take weight of engine/gearbox assembly on the spindles.

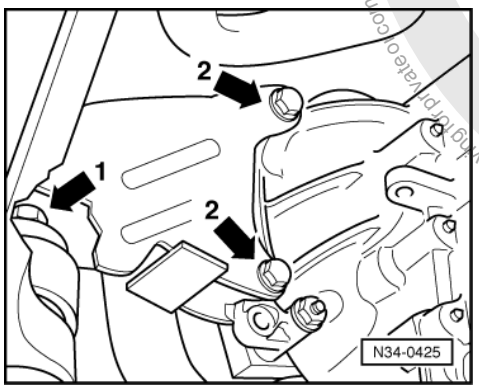

- -> Remove console front securing bolts on bonded rubber mounting (arrow 1) and on gearbox (arrow 2).
- Carefully tilt engine and gearbox. To do this lower left-hand spindle slightly on support bar 10-222 A.

Note:

Do not damage P.A.S. pipe when moving engine/gearbox assembly.

- Assemble gearbox jack with gearbox support 3282, adjustment plate 3282/6 for "084", "085" gearbox and support elements as follows:
- Place adjustment plate 3282/6 on gearbox support 3282.

Note:

Adjustment plate only fits in one position.

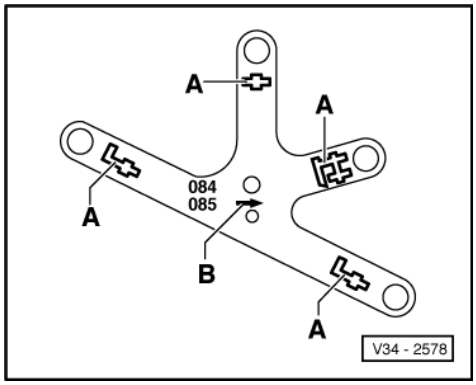

- Align arms of gearbox support according to holes in adjustment plate.
- -> Bolt on support elements -A-, as illustrated, on adjustment plate.

Protected by copyright. Copyright by Volkswagen AG. Volkswagen AG does not guarantee or accept any liability with respect to the correctness of information in this document. Copyright by Volkswagen AG. Reproduction, in part or in whole, is not permitted unless authorised by Volkswagen AG. Volkswagen AG does not guarantee or accept any liability with respect to the correctness of information in this document. Copyright by Volkswagen AG.
satelettronica

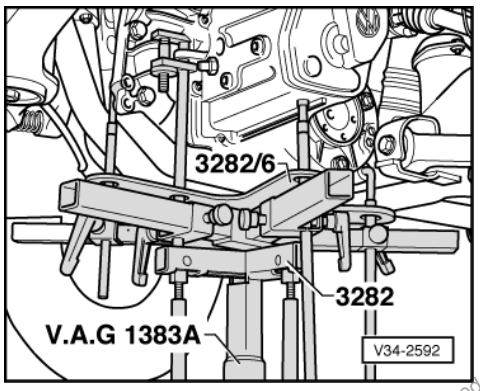

- -> Place gearbox jack under vehicle, arrow symbol -B- (=> Illustration V34-2578) on adjustment plate points to front of vehicle.
- Align adjustment plate parallel to gearbox and lock safety supports on gearbox.
- Remove lower engine/gearbox securing bolts.
- Press gearbox off dowels and lower carefully.

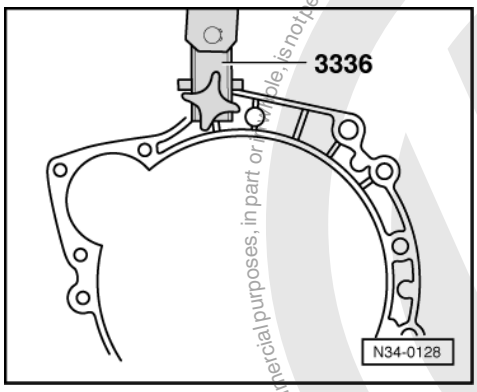

Transporting the automatic gearbox

Special tool 3336 may be used to transport the gearbox and also when setting up gearbox mount 3282.

- -> Bolt gearbox lifting device 3336 to clutch housing.

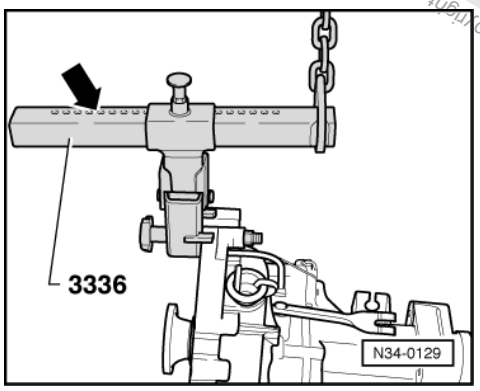

- -> Set support beam on sliding piece with locking pin (arrow).

No. of holes visible = 9

- Take gearbox out with workshop crane and gearbox lifting device 3336.

Installing

- Clean input shaft splines and lightly grease with G000 100 grease.

Protected by copyright. Copying for private or commercial purposes, in part or in whole, is not permitted unless authorised by Volkswagen AG. Volkswagen AG does not guarantee or accept any liability with respect to the correctness of information in this document. Copyright by Volkswagen AG.
satelettronica

The clutch plate must be able to slide lightly to and fro on the input shaft.

- Check whether dowel sleeves for aligning engine/gearbox are fitted in cylinder block, install if necessary.
- Ensure that the intermediate plate is correctly positioned on engine.
- Assemble gearbox jack with gearbox support 3282, adjustment plate 3282/6 for "084", "085" gearbox and support elements as follows:
- Place adjustment plate 3282/6 on gearbox support 3282.

Note:

Adjustment plate only fits in one position.

- Align arms of gearbox support according to holes in adjustment plate.

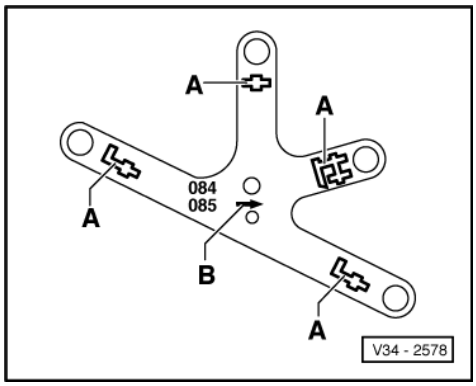

- -> Bolt on support elements -A-, as illustrated, on adjustment plate.
- Place gearbox on gearbox jack.
- Align adjustment plate and gearbox parallel with one another and lock safety supports on gearbox.

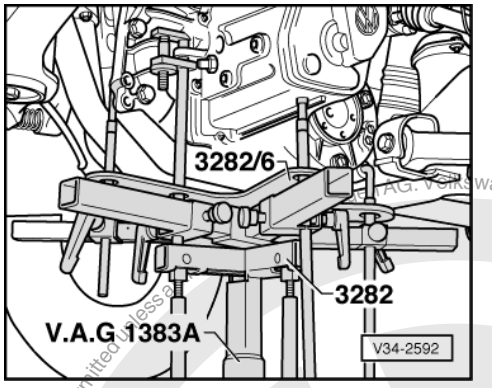

- -> Place gearbox jack under vehicle, arrow symbol -B- (=> Illustration V34-2578) on adjustment plate points to front of vehicle.
- Insert gearbox.
- Install lower engine/gearbox securing bolts.
- Align engine/gearbox in installation position. To do this tighten the left-hand spindle on support bar 10-222 A.

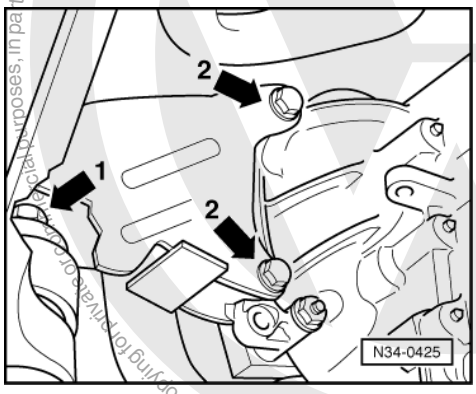

Protected by copyright. Copying for private or commercial purposes, in part or in whole, is not permitted unless authorised by AG. Volkswagen AG does not guarantee or accept any liability with respect to the correctness of information in this document. Copyright by Volkswagen AG.
satelettronica

- -> Fit and secure console front securing bolts to bonded rubber mounting (arrow 1) and on gearbox (arrow 2).

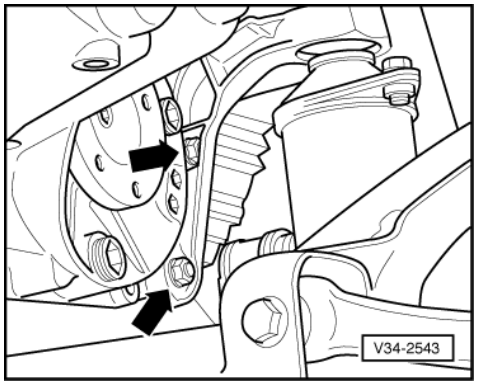

- -> Bolt console to gearbox (arrows)

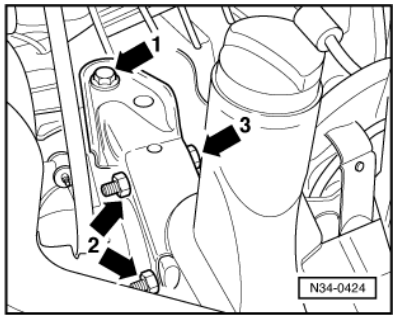

- -> Fit left-hand gearbox support. To do this guide bolts (arrow 2) in from left (arrow 3).
- Fit bolt (arrow 1).
- Install upper engine/gearbox securing bolts.
- Remove support bar 10-222A.

Note:

Install engine/gearbox mountings stress-free.

=> Repair group 10; Removing and installing engine. Removing and installing engine.

Vehicles with an oval air cleaner:

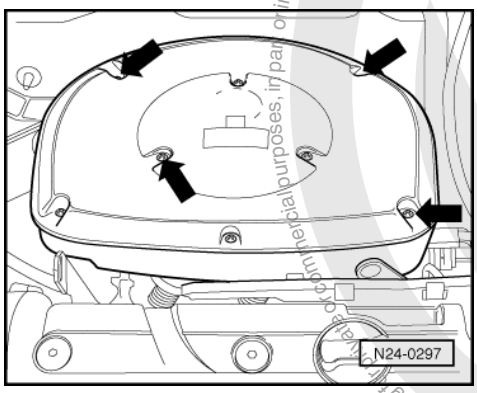

- -> Position housing carefully and fit securing bolts (arrows).

- Position starter and fit upper bolt.
- Install exhaust system bracket. To do this fit one starter/gearbox bolt and one engine gearbox bolt and one engine/gearbox bolt then tighten.

satelettronica
Protected by copyright. Copyright by Volkswagen AG. Copyright by Volkswagen AG. Volkswagen AG does not guarantee or accept any liability with respect to the correctness of information in this document. Copying for private or commercial purposes, in part or in whole, is not permitted unless authorised by Volkswagen AG.

- Bolt exhaust system plate to bracket.
- Install flywheel cover plate (arrow 2, illustration N34-0423 =>Page 53).

- Clean threaded hole in selector finger with M8 tap.

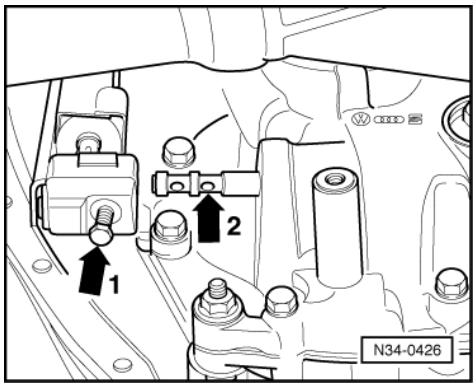

- -> Always replace selector finger securing bolt (arrow 1). The bolt is to be pre-treated with locking fluid.
- Push selector finger onto inner selector finger so far as to allow the securing bolt (arrow 1) to fit into the forward recess on the selector lever (arrow 2).
- Fit drive shafts to flange shafts.

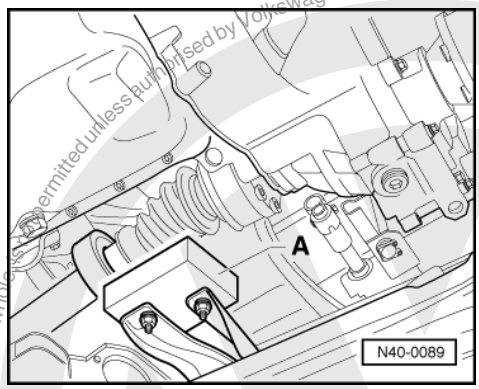

- -> Screw balance weight -A- to subframe.

  Installation position: Install so that the larger distance from front edge to hole faces forwards.

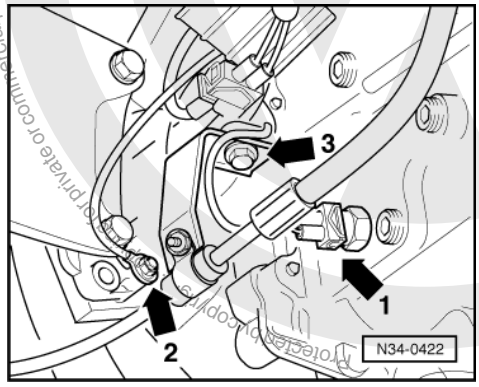

- -> Fit earth wire (arrow 2).
- Fit power steering line retainer to gearbox (arrow 3), whilst simultaneously securing retainer for connector.
- Reconnect reverse light connector (arrow 1).
- Install insulation tray below engine/gearbox, if fitted.
- Remove cover before engine toothed belt guard.

Protected by copyright. Copyright by Volkswagen AG. Volkswagen AG does not guarantee or accept any liability with respect to the correctness of information in this document. Copyright by Volkswagen AG. Not for private or commercial purposes, in part or in whole, permitted unless authorised by Volkswagen AG.
satelettronica

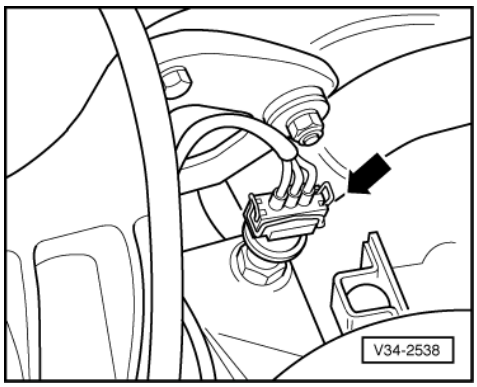

- -> Reconnect speedometer sender connector (arrow).

Clutches with automatic adjustment

- Reconnect clutch cable to gearbox => Page 23

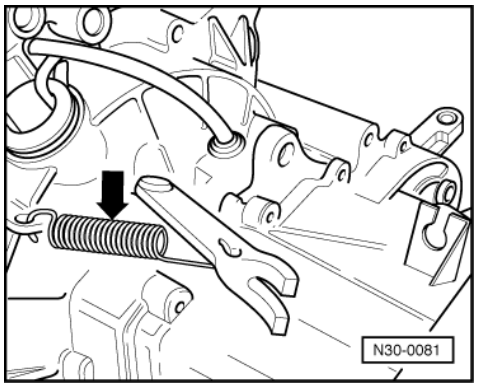

Notes:

- -> Vehicles with automatic adjustment of the clutch mechanism, the spring (arrow) between release lever and gearbox must be unconditionally removed, otherwise the function of the clutch cable adjustment mechanism cannot be guaranteed!
- The spring is only required for securing the release bearing during transport.

- Check clutch cable function =>Page 19

Clutches without automatic adjustment

- Fit clutch cable to gearbox => Page 27
- Adjusting clutch => Page 28

Note:

Do not remove the spring (arrow) on vehicles which do not have an automatic adjustment of the clutch mechanism.

- Reconnect earth strap to battery.

Note:

Note radio coding for vehicles with coded radio.

- Check gearbox oil =>Page .
- Adjust selector mechanism => Page 49 .

Protected by copyright. Copying for private or commercial purposes, in part or whole, is not permitted unless authorised by Volkswagen AG. Volkswagen AG does not guarantee or accept any liability with respect to the correctness of information in this document. Copyright by Volkswagen AG.
satelettronica

Tightening torques

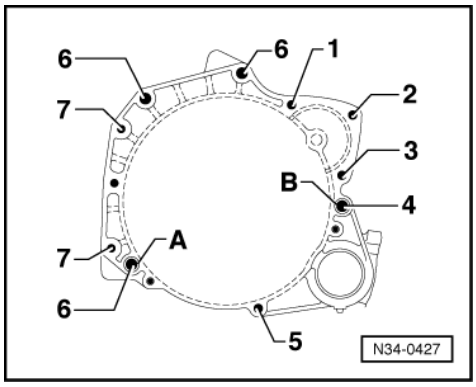

-> Gearbox to engine

Item	Bolt	Qty.	Nm
1	M 8 x 65	1	20
2	M 8 x 70	1	20
3	M 8 x 160	1	20
4	M 12 x 62	1	80
51)	M 7 x 12	1	15
6	M 12 x 70	3	80
7	M10 x 70	2	45

Items A + B - Dowel sleeves

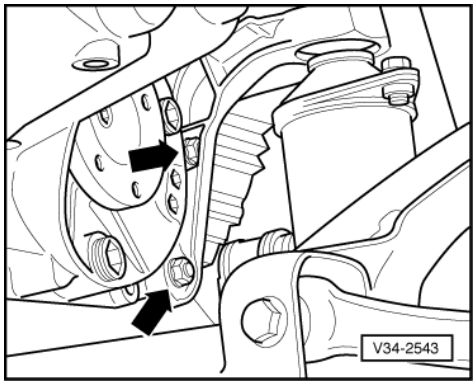

1) Cover plate for flywheel

Console rear to gearbox (arrows)	60 Nm->

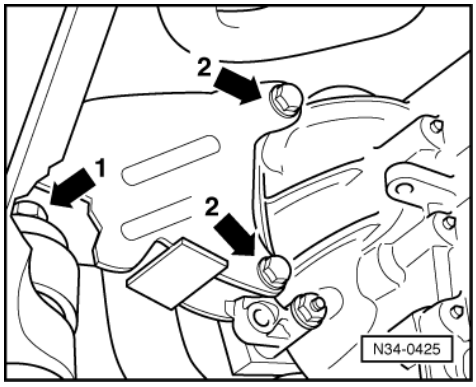

Protected by copyright. Copying for private or commercial purposes, in part or in whole, is not permitted unless authorised by Volkswagen AG. Volkswagen AG does not guarantee or accept any liability with respect to the correctness of information in this document. Copyright by Volkswagen AG.
satelittronica

Console front to gearbox (arrow 2)	45 Nm->

Console front to bonded rubber mounting (arrow 1)	60 Nm

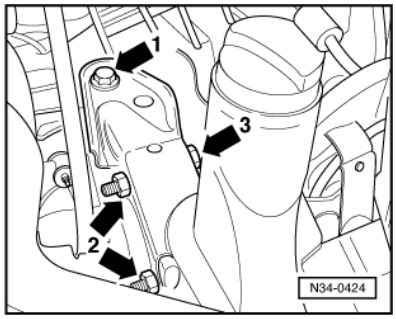

Gearbox support left to gearbox (arrows 2 and 3)	45 Nm->

Gearbox support left to bonded rubber mounting (arrow 1)	50 Nm

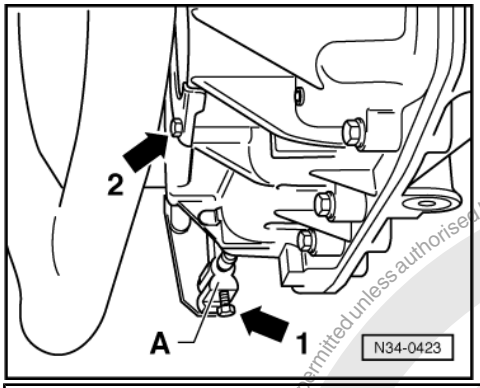

Selector finger -A- to gearbox (arrow 1)	20 Nm->
Clutch housing cover plate (arrow 2)	15 Nm

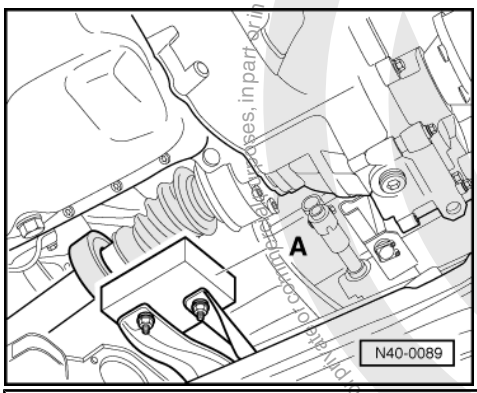

Drive shaft to flange shaft	45 Nm
Vibration damper -A- to assembly sub-frame	30 Nm->

Protected by copyright. Copying for private or commercial purposes, in part or in whole, is not permitted unless authorised by Volkswagen AG. Volkswagen AG does not guarantee or accept any liability with respect to the correctness of information in this document. Copyright by Volkswagen AG.
satelettronica

3 - Checking gearbox oil

3.1 - Checking gearbox oil

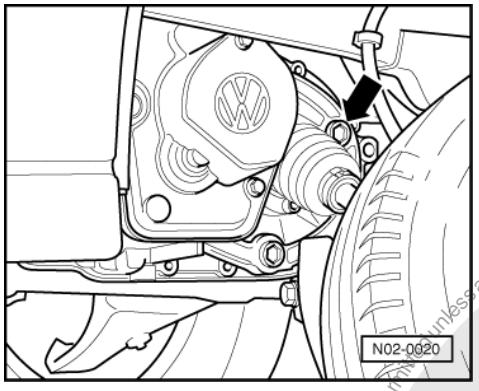

Gear oil specification => Page 2

Gearboxes up to gearbox build date 22 10 5:

- Turn steering onto full left lock
- -> Remove plug (arrow) for checking gearbox oil differential housing with e.g. 17 mm AF hexagon bit socket, universal joint, extension and T bar.

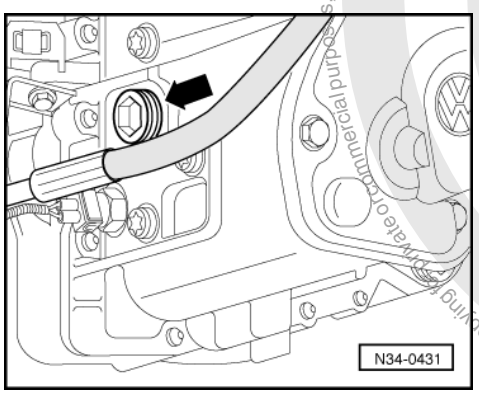

Gearboxes from gearbox build date 23 10 5:

- -> Remove plug (arrow) for checking gearbox oil from gearbox housing.

Note:

- For Diesel engine use e.g. 17 AF hexagon bit socket, universal joint, extension and T bar.

The oil level is correct when the gearbox is full to the lower edge of the filler hole.

- Fit plug (arrow).

When filling with new oil note following:

- Remove plug (arrow).
- Top up oil to lower edge of filler hole.
- Fit plug (arrow).

Tightening torque

Oil filler plug	25 Nm

Protected by copyright. Copying for private or commercial purposes, in any form or by any means, is not permitted unless authorised by Volkswagen AG. Volkswagen AG does not guarantee or accept any liability with respect to the correctness of information in this document. Copyright by Volkswagen AG.
satelettronica

4 - Dismantling and assembling gearbox

4.1 - Dismantling and assembling gearbox

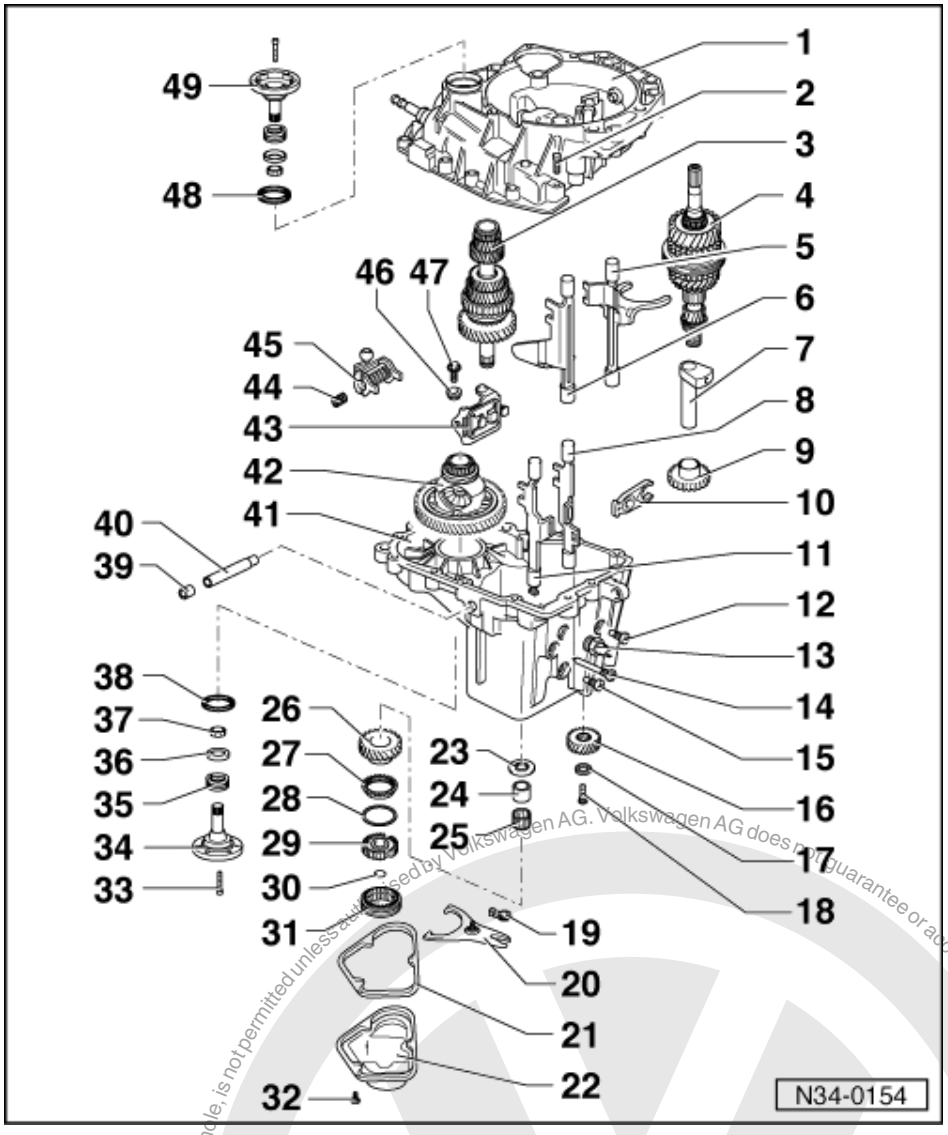

Sequence for dismantling and assembling => Page 70

1 Clutch housing
- Servicing => page 84

2 Hexagon bolt, 25 Nm

3 Output shaft
- Dismantling and assembling => Page 107

4 Input shaft
- Dismantling and assembling => Page 95

5 Selector rod with selector fork for 3rd and 4th gear

6 Selector rod with selector fork for 1st and 2nd gear

7 Reverse gear shaft

Protected by copyright. Copying for private or commercial purposes, in part or in whole, is not permitted unless authorised by Volkswagen AG. Volkswagen AG does not guarantee or accept any liability with respect to the correctness of information in this document. Copyright by Volkswagen AG.
satelettronica

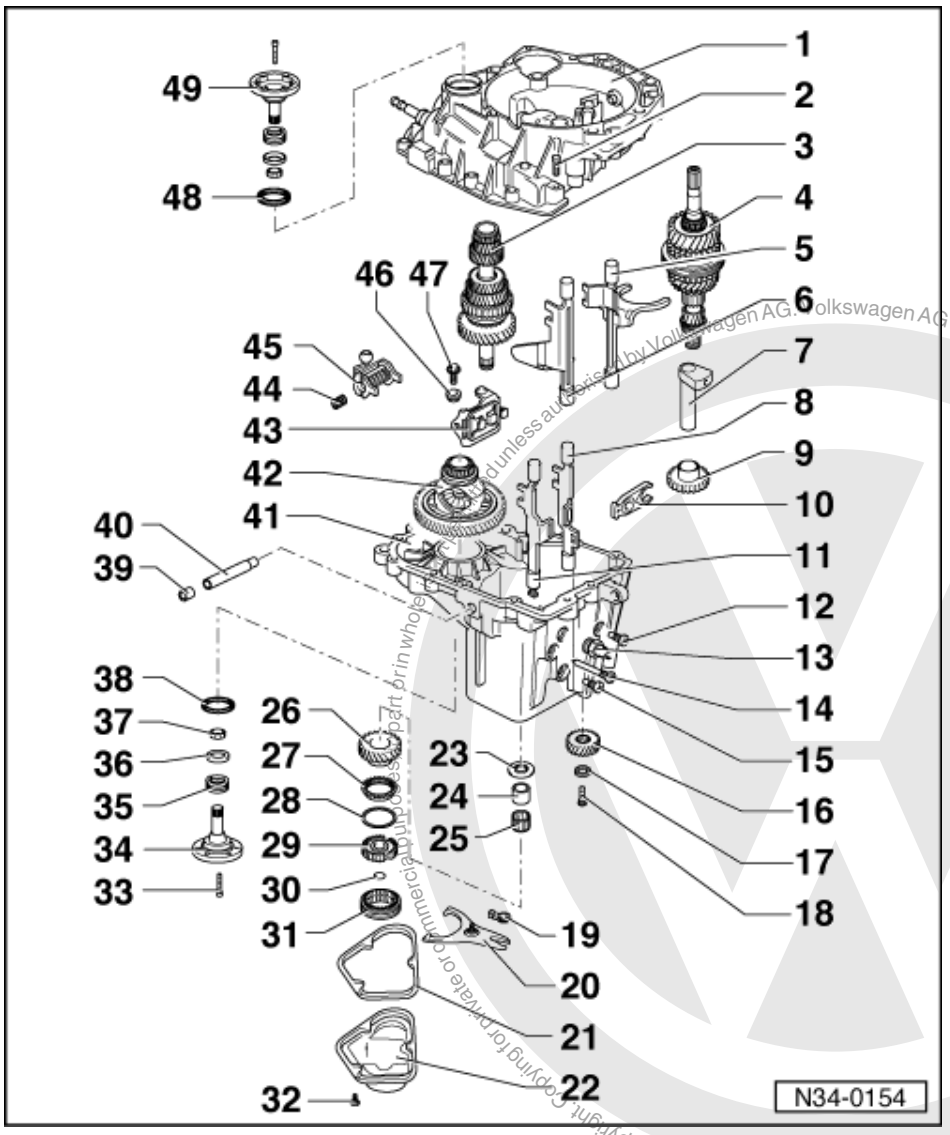

8 Selector rod for reverse gear

9 Reverse gear
- Insert with shaft

10 Reverse lever
- Insert with reverse gear selector rod

11 Selector rod
- For 5th gear

12 Bolt, 35 Nm
- For reverse gear shaft

13 Reversing light switch, 20 Nm

14 Bolt, 35 Nm
- For 5th gear and reverse gear selector rods

15 Bolt, 35 Nm
- For reverse gear reverse lever

Protected by copyright. Copying for private or commercial purposes, in part or in whole, is not permitted unless authorised by Volkswagen AG. Volkswagen AG does not guarantee or accept any liability with respect to the correctness of information in this document. Copyright by Volkswagen AG.
satelettronica

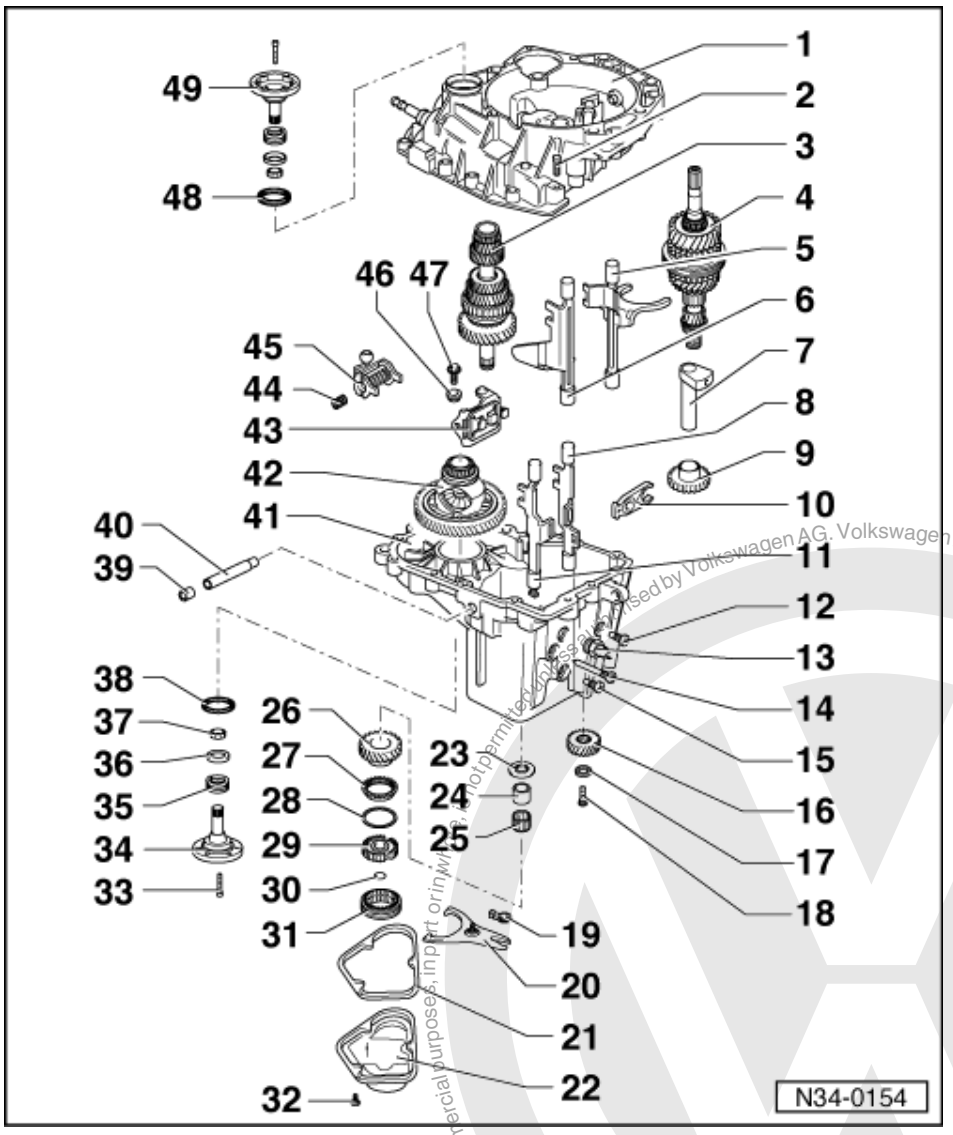

16 5th speed gear wheel
17 Dished spring
18 Bolt, 40 Nm
19 Clip
20 5th gear selector fork
21 Gasket
22 Gearbox housing cover
23 Thrust washer for 5th gear wheel
24 Sleeve for needle roller bearing
25 Needle roller bearing
26 5th selector gear
27 5th gear synchro-ring

- Locking pieces are on synchro-ring

Protected by copyright. Copying for private or commercial purposes, in part or in whole, is not permitted unless authorised by Volkswagen AG. Volkswagen AG does not guarantee or accept any liability with respect to the correctness of information in this document. Copyright by Volkswagen AG.
satelettronica

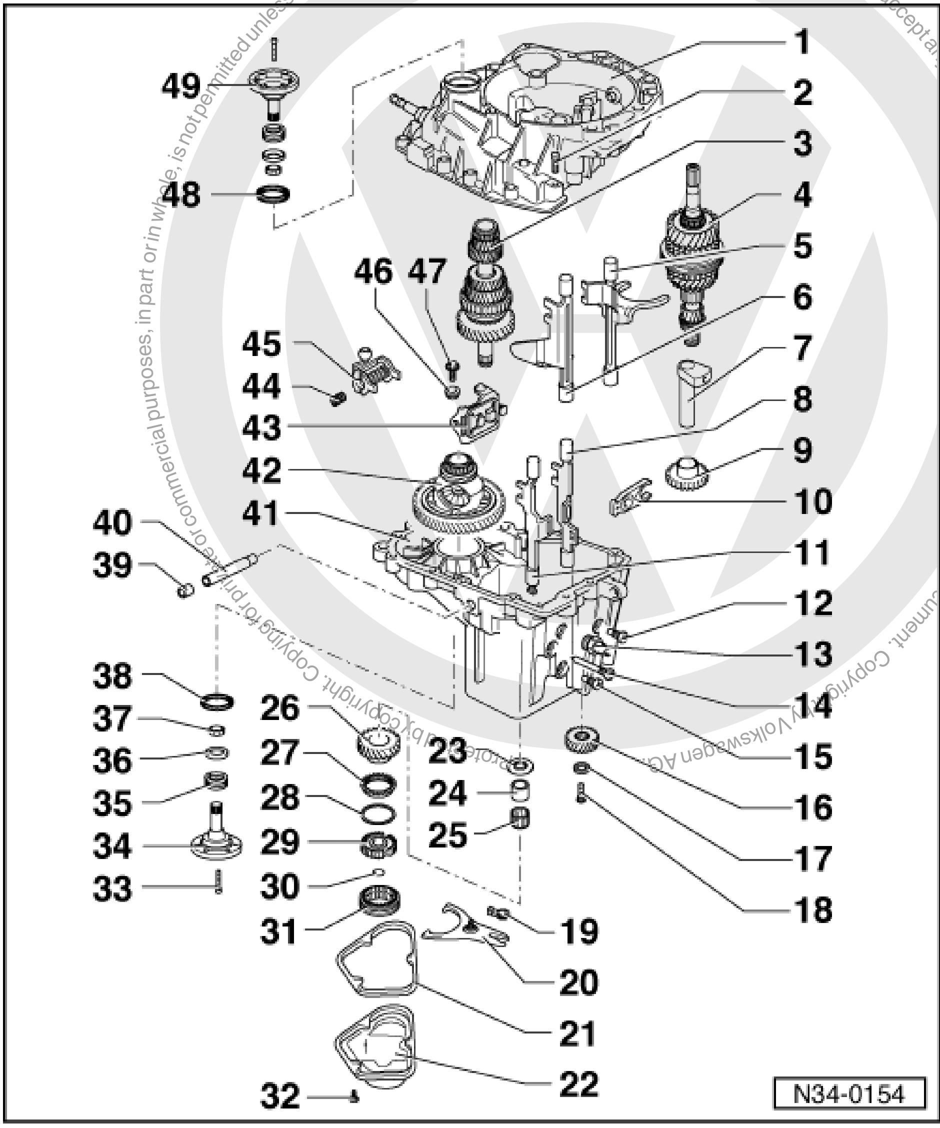

28 Spring
29 5th gear synchro-hub
30 Circlip
- Always renew
- Determining thickness => Page 82

31 5th gear locking collar
32 Hexagon bolt, 10 Nm
33 Hexagon socket head bolt, 25 Nm
34 Left-hand flanged shaft
- Do not interchange, left and right-hand flanged shafts differ =>Page 80

35 Spring for flanged shaft
36 Thrust washer

Protected by copyright. Copying for private or commercial purposes, in part or in whole, is not permitted unless authorised by Volkswagen AG. Volkswagen AG does not guarantee or accept any liability with respect to the correctness of information in this document. Copyright by Volkswagen AG.

satelettronica

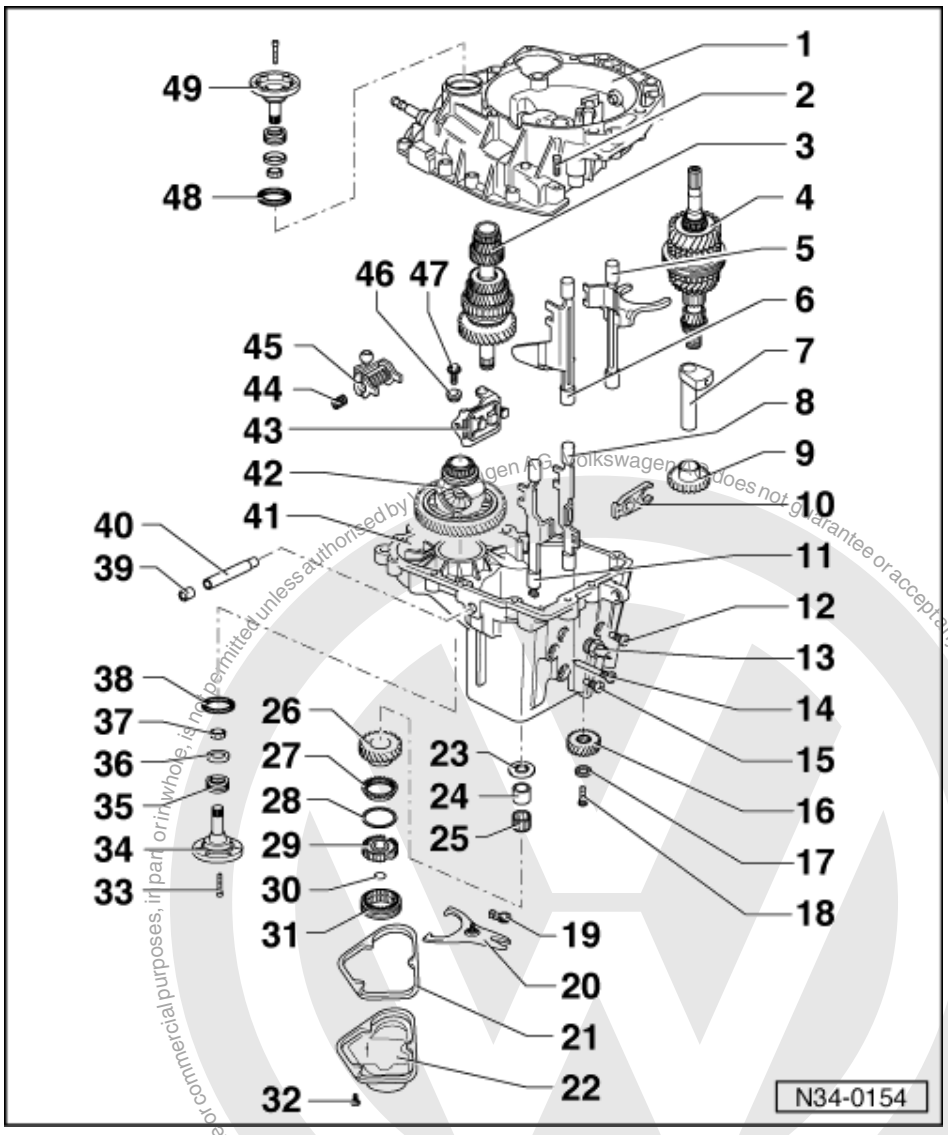

37 Tapered ring

38 Oil seal

- For left-hand flanged shaft
- Left and right-hand diameters differ.
- Renewing with gearbox installed => Page 126

39 Plug

40 Selector shaft

41 Gearbox housing

- Modification:
  As of gearbox build date 23105 the position of the oil filler hole has been revised => Fig. 1 .
  Install new gearbox housing only in conjunction with oil collector => Fig. 2 .
  The new gearbox housing can, in conjunction with the oil collector, be used with older gearboxes. The oil capacity is then 2.7 litre.

Protected by copyright. Copying for private or commercial purposes, in part or in whole, is not permitted unless authorised by Volkswagen AG. Volkswagen AG does not guarantee or accept any liability with respect to the correctness of information in this document. Copyright by Volkswagen AG.
satelettronica

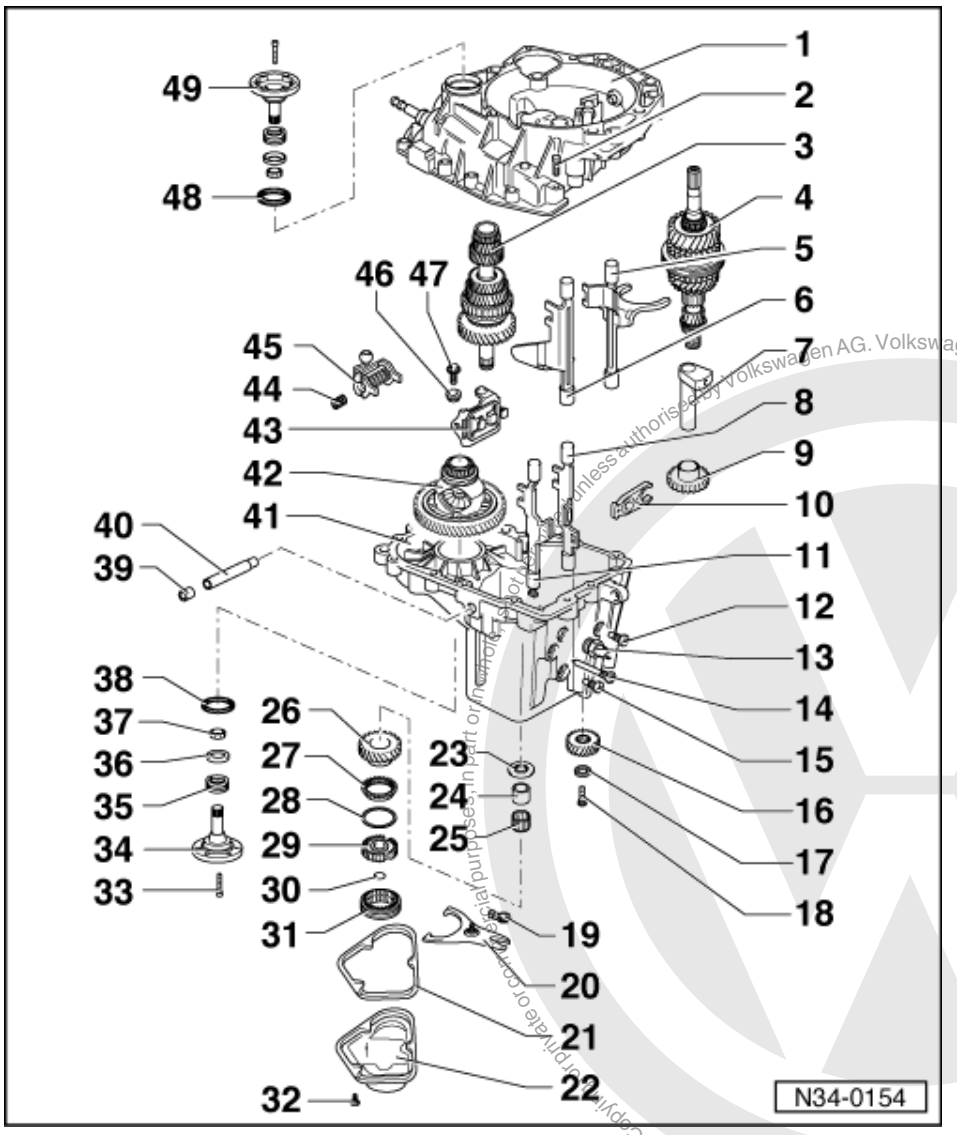

42 Differential
- Dismantling and assembling => page 129

43 Selector console

44 Spring

45 Selector finger

46 Bush
- For selector console

47 Bolt, 15 Nm

48 Oil seal
- For right-hand flanged shaft
- Left and right-hand diameters differ
- Renewing with gearbox installed => Page 126

49 Flanged shaft
- Do not interchange, left and right-hand flanged shafts differ

Protected by copyright. Copying for private or commercial purposes, in part or in whole, is not permitted unless authorised by Volkswagen AG. Volkswagen AG does not guarantee or accept any liability with respect to the correctness of information in this document. Copyright by Volkswagen AG.
satelettronica

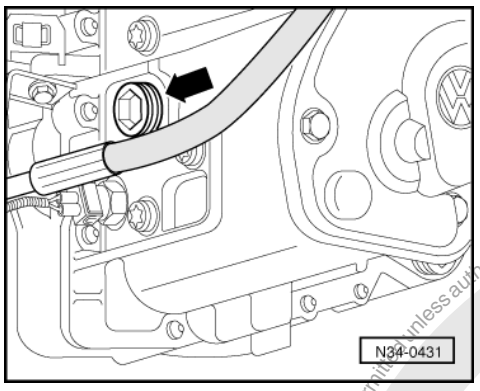

-> Fig.1 Position of oil filler hole changed from gearbox build date 23 10 5

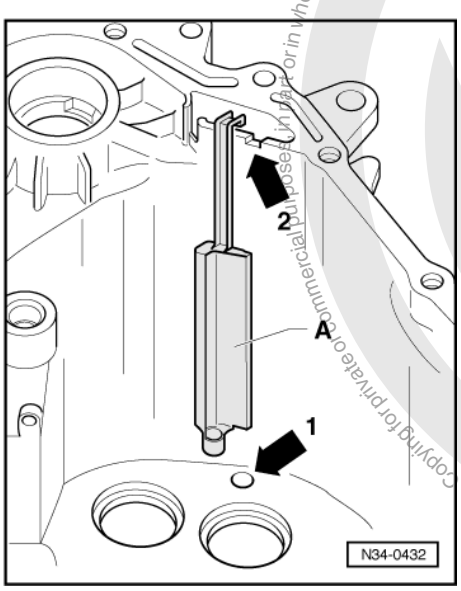

-> Fig.2 Oil collector -A- installation position in gearbox housing, from gearbox date 23 10 5

- Insert oil collector into hole -arrow 1- and slot -arrow 2- simultaneously.

4.2 - Dismantling and assembling sequence

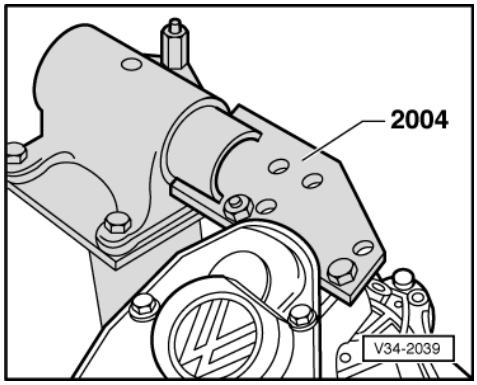

Protected by copyright. Copying for private or commercial purposes, in part or in whole, is not permitted unless authorised by Volkswagen AG. Volkswagen AG does not guarantee or accept any liability with respect to the correctness of information in this document. Copyright by Volkswagen AG.
satelettronica

Dismantling and assembling gearbox housing cover, gearbox housing, selector mechanism, input shaft, output shaft (pinion shaft), differential and selector forks

Dismantling

- -> Mount gearbox on repair stand.
- Drain gearbox oil.

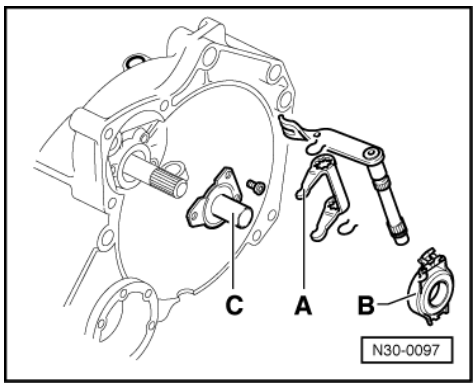

- -> Remove clutch release lever -A- with release bearing -B-.
- Remove guide sleeve -C-.

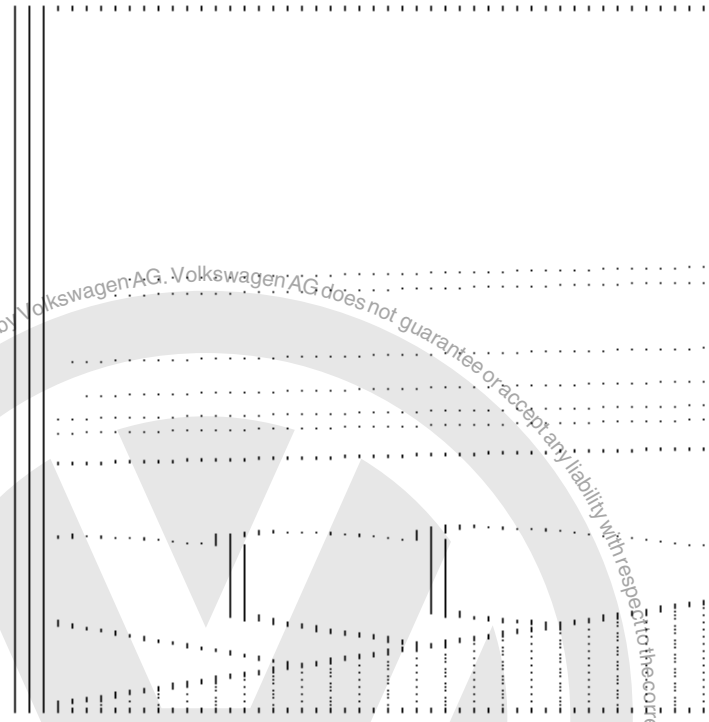

- Remove both flange shafts.
  Take out flanged shafts along with springs, thrust washers and tapered rings.
  Unbolt gearbox housing cover and take off along with seal.

satelettronica
Protected by copyright. Copying for private or commercial purposes, in part or in whole, is not permitted unless authorised by Volkswagen AG. Volkswagen AG does not guarantee or accept any liability with respect to the correctness of information in this document. Copyright by Volkswagen AG.

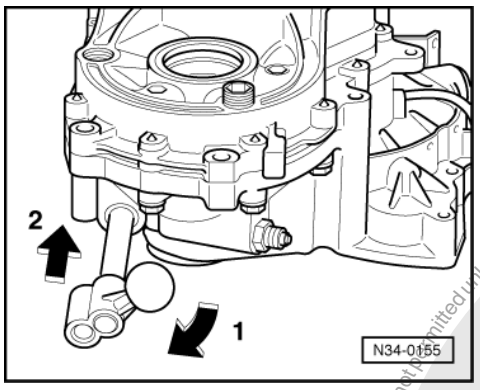

- Screw selector finger onto selector shaft.
- -> Select 5th gear (arrows 1 and 2).

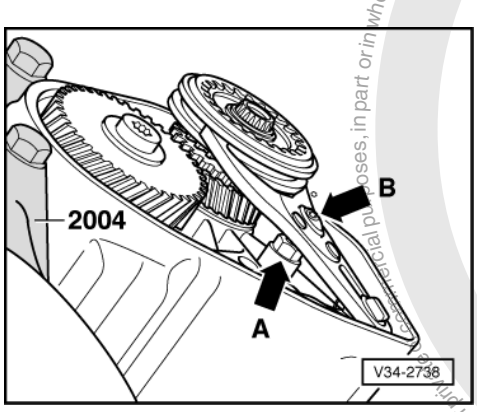

- -> Loosen lock nut (arrow A) below 5th gear fork.
- Unbolt ball head bolt (arrow B) and remove selector fork together with 5th gear locking collar.

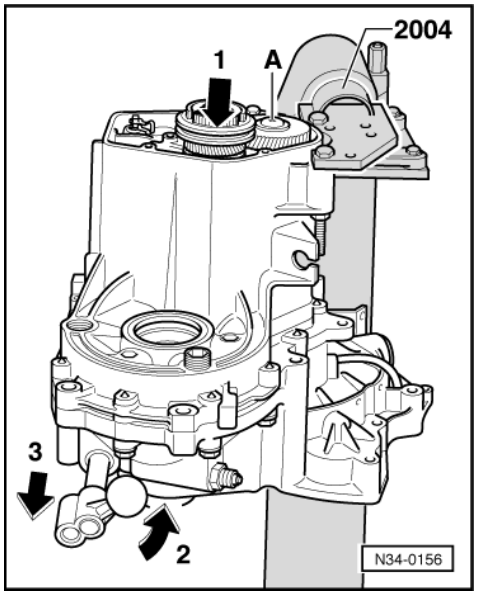

- Slide locking collar again over synchro-hub.
- -> Remove bolt -A- for 5th gear by selecting 5th (arrow 1) and 2nd gear (arrows 2 and 3).
- After engaging both gears the input shaft and output shaft are locked, synchro-hub and gear cannot turn. The bolt can now be loosened.
- Take off 5th gear synchro-hub and take out 2nd gear.

Protected by copyright. Copyright by Volkswagen AG.
Commercial purposes, in part or in whole, are not permitted unless authorised by Volkswagen AG. Volkswagen AG does not guarantee or accept any liability with respect to the correctness of information in this document.
satelettronica

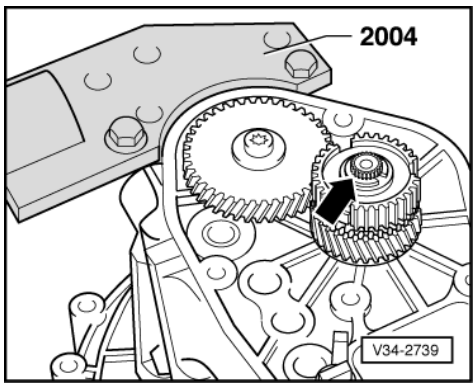

- -> Take off securing ring (arrow) for synchro-hub

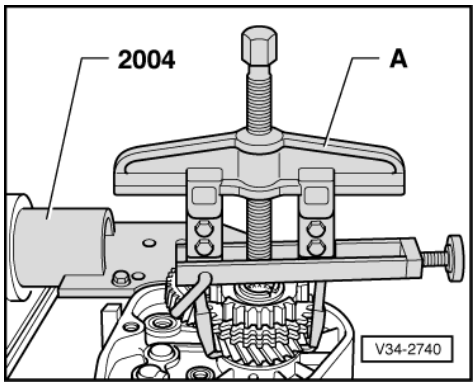

- -> Pull off synchro-hub with 5th selector gear.

  A - Two arm puller e.g. Kukko 20/10 with Matra V/170 hooks.

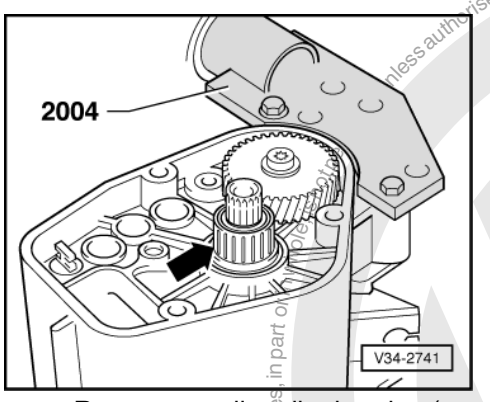

- -> Remove needle roller bearing (arrow).

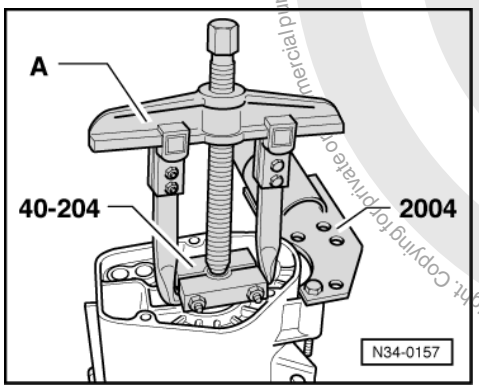

- -> Pull off needle roller bearing sleeve.
- Heat sleeve for needle roller bearing with hot air blower V.A.G. 1416 to approx. 100° C.

Protected by copyright. Copying for private or commercial purposes, in part or in whole, is not permitted unless authorised by Volkswagen AG. Volkswagen AG does not guarantee or accept any liability with respect to the correctness of information in this document. Copyright by Volkswagen AG.
satelettronica

- Retension tensioning device 40-204, during pulling operation as necessary.

  A - Two arm puller e.g. Kukko 20/2 with 2-150 hooks.

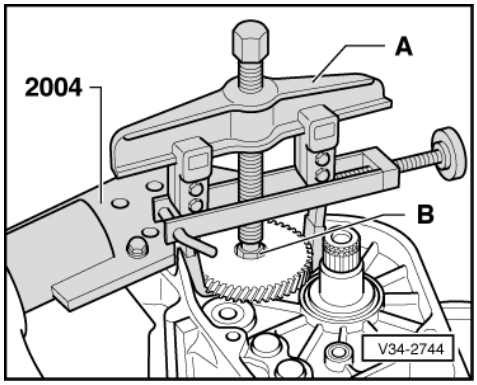

- -> Pull off 5th gear

  A - Two arm puller e.g. Kukko 20/10 with Matra V/170 hooks.
  B - Hexagon bolt M8 x 15 (13 mm AF).
  Heat gear wheel with hot air blower V.A.G 1416 and pull off using a two-arm puller. Lever gear wheel up carefully using 2 levers if necessary.

Note:

When pulling off the gear wheel ensure that the hooks do not bend outwards, if necessary tighten screw. After 5th gear wheel has been removed check for damage.

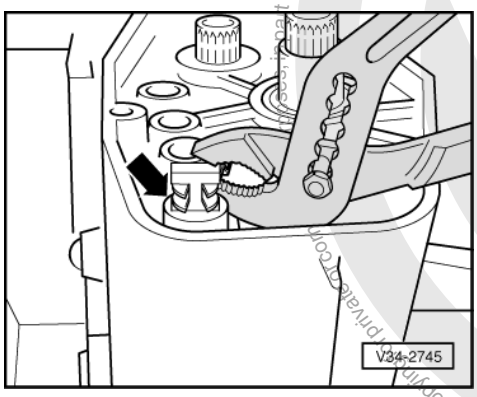

- -> Squeeze clip together (arrow) and take off.

- Remove clutch housing securing bolts.

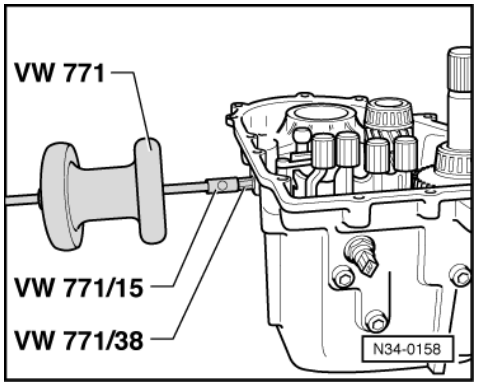

- Take off clutch housing.
- Take differential off gearbox housing.

Protected by copyright. Copyright by Volkswagen AG.
Copyright by Volkswagen AG. Volkswagen AG does not guarantee or accept any liability with respect to the correctness of information in this document. Copyright by Volkswagen AG.
satelettronica

- -> Pull sealing plugs out.

Note:

If special tool VW 771/38 is not available pull sealing plugs out using M 7 x 35 bolt. To do this cut threaded section off bolt and chamfer threaded end.

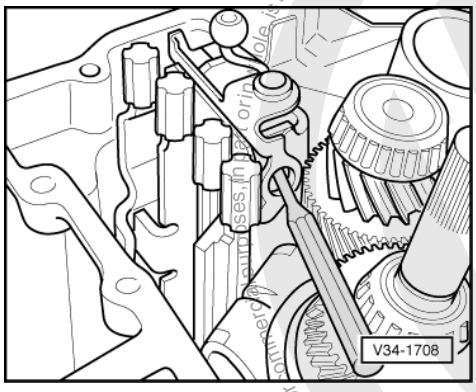

- -> Pull out selector shaft, drive out with a drift if necessary.

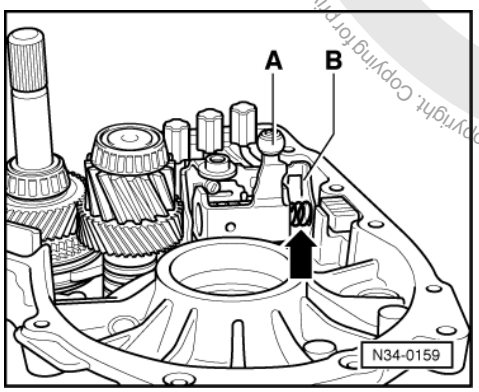

- -> Remove spring (arrow) between selector finger -A- and selector console -B-.
- Remove selector finger -A-.

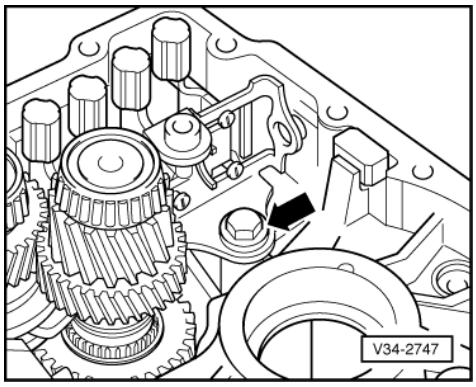

- -> Remove bolt (arrow) and take out selector console with bush.

Volkswagen AG. Volkswagen AG does not guarantee or accept any liability with respect to the correctness of information in this document. Copyright by Volkswagen AG. Protected by copyright. Copying for private, commercial purposes, in part or in whole, is not permitted unless authorised by Volkswagen AG.
satelettronica

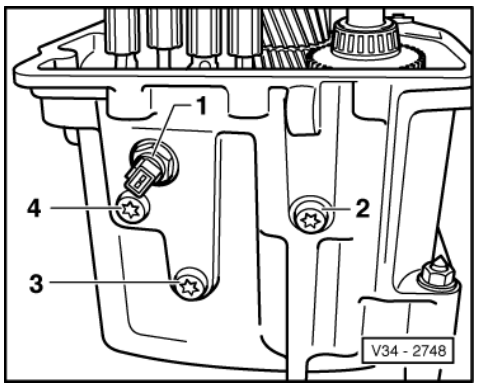

- -> Remove reversing light switch -1- and reverse gear securing bolts -2-, -3- and -4-.

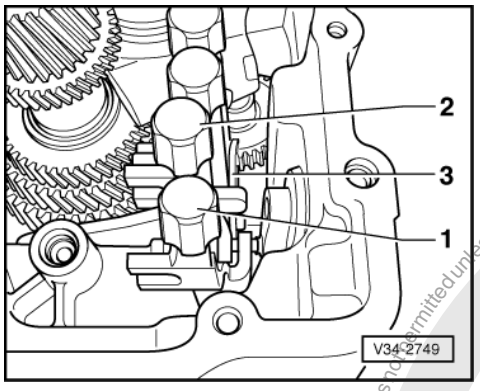

- -> Remove 5th gear selector rod -1- and reverse gear selector rod -2- with reverse lever -3-.

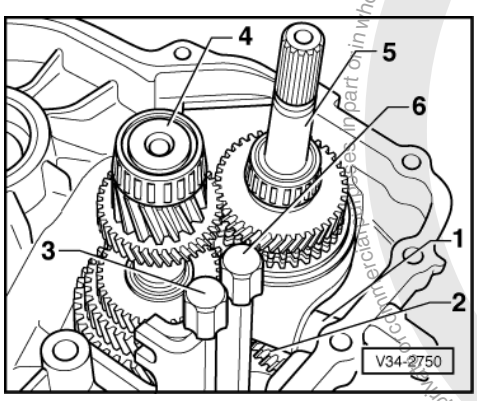

- -> Drive out reverse gear shaft -1-.
- Take out input shaft - 5 -, output shaft -4-, 1st and 2nd gear selector rod -3-, 3rd and 4th gear selector rod -6- as well as reverse gear -2- and shaft -1- from gearbox housing.

Protected by copyright. Copying for private or commercial purposes, in part or in whole is not permitted unless authorised by Volkswagen AG. Volkswagen AG does not guarantee or accept any liability with respect to the correctness of information in this document. Copyright by Volkswagen AG.
satelettronica

Protected by copyright. Copyright by Volkswagen AG.
Copyright by Volkswagen AG. Volkswagen AG does not guarantee or accept any liability with respect to the correctness of information in this document.
Copying for private or commercial purposes, in part or in whole, is not permitted unless authorised by Volkswagen AG.
satelettronica

Assembling

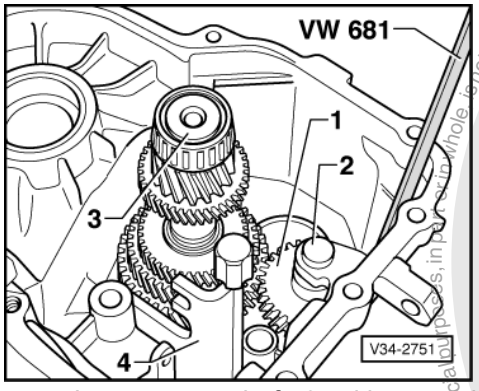

- -> Insert output shaft -3- with 1st and 2nd gear selector rod -4-.
- Slide reverse gear -1- over shaft -2- and insert shaft.

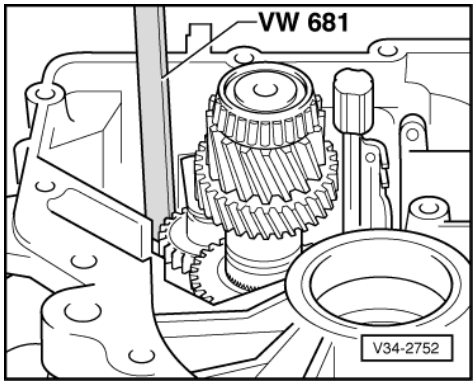

- -> Lift up reverse gear so that the reverse gear lever can be inserted later.

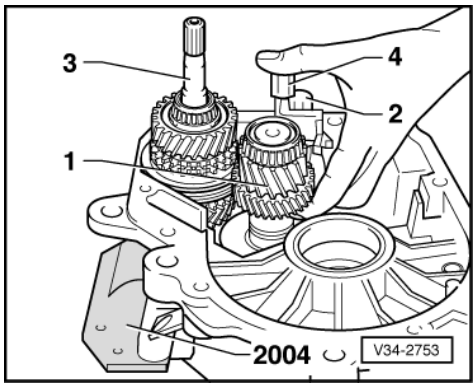

- -> Lift up output shaft -1- with 1st and 2nd gear selector rod slightly and insert again together with input shaft -3- as well as 3rd and 4th gear selector rod -4-.

Notes:

- Reverse gear wheel remains lifted with VW 681.
- Guide input shaft with 3rd and 4th gear past output shaft 4th gear during insertion.

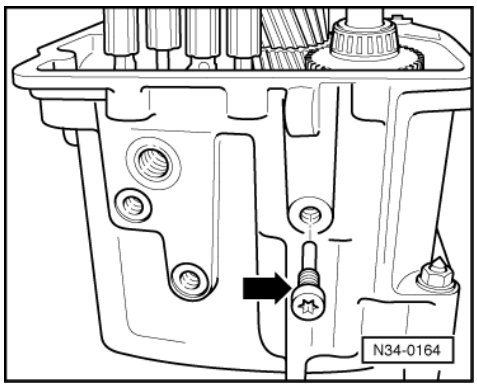

- -> Secure shaft for reverse gear wheel (arrow).

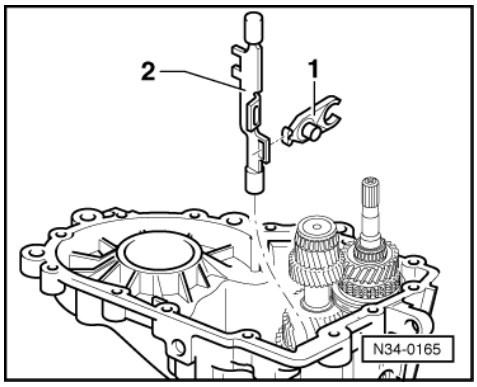

- -> Insert reverse gear lever -1- into reverse gear selector rod -2-.
- Install components, but first insert reverse gear lever into reverse gear.

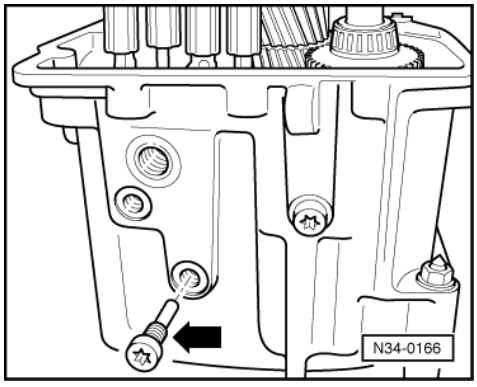

- -> Secure reverse gear lever (arrow).
- Remove special tool VW 681 from gearbox housing.

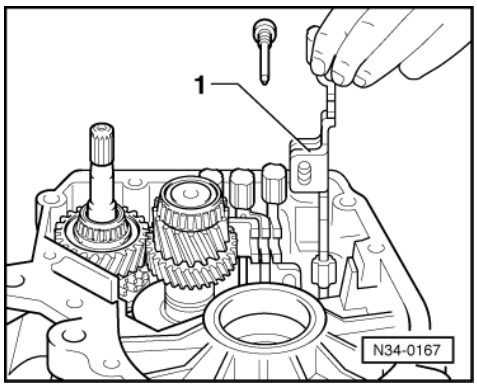

Protected by copyright. Copying for private or commercial purposes, in part or in whole, is not permitted unless authorised by Volkswagen AG. Volkswagen AG does not guarantee or accept any liability with respect to the correctness of information in this document. Copyright by Volkswagen AG.
satelettronica

- -> Install 5th gear selector fork -1- and secure.

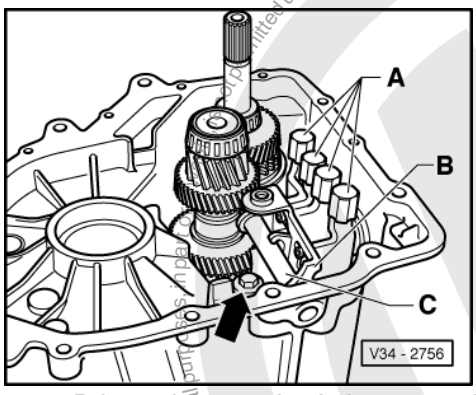

- -> Bring selector rods -A- into neutral.
- Install selector console -B- with bush and bolt.
- Align selector console -B-, to do this insert selector shaft -C- and tighten bolt -arrow-.
- Remove selector shaft -C- again.

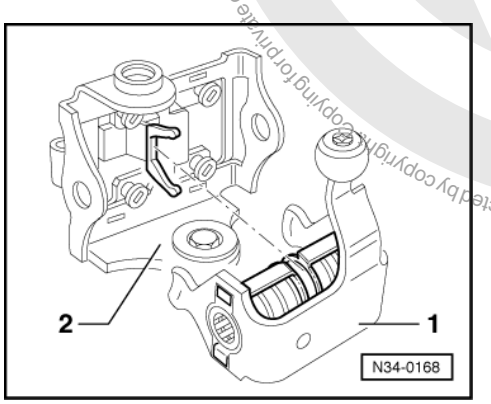

- -> Insert selector finger -1- in selector console -2-.

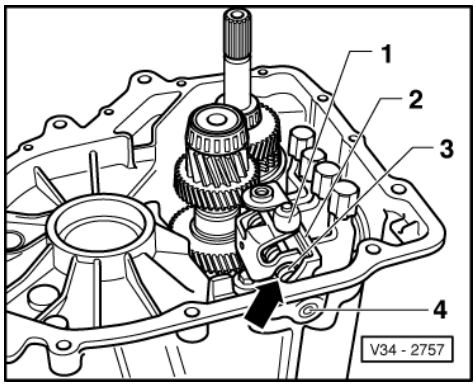

- -> Insert spring (arrow) between selector finger -1- and selector console -2-.
- Push selector shaft -3- into selector finger and selector console.

Installation position:

The step points towards input and output shafts.

- Drive sealing plug -4- in flush.
- If necessary adjust selector finger and selector sleeve => Page 92 .
- Install differential.
- Fit gearbox housing.

Protected by copyright. Copying for private or commercial purposes, in part or in whole, is not permitted unless authorised by Volkswagen AG. Volkswagen AG does not guarantee or accept any liability with respect to the correctness of information in this document. Copyright by Volkswagen AG.
satelettronica

- Fit reversing light switch.

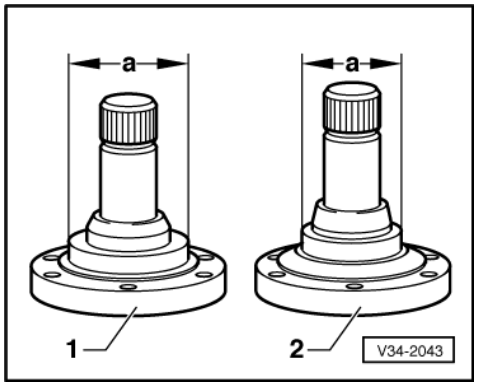

- Install springs, thrust washers, tapered rings and flange shafts. Observe differences between flange shafts.

-> Differences

Item	Flanged shaft	Dimension "a"
1	Left, gearbox housing side	57 mm
2	Right, clutch housing side	48 mm

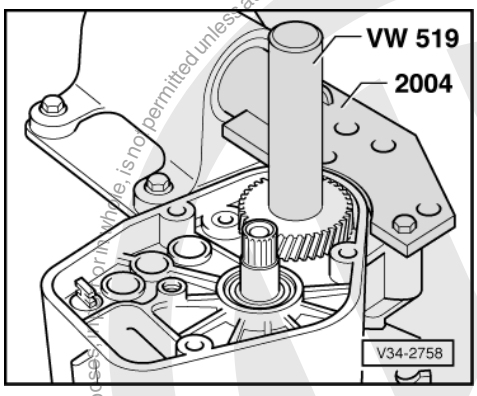

Installation position of 5th gear

The recess on internal diameter faces gearbox housing.

- -> Knock-on 5th gear.

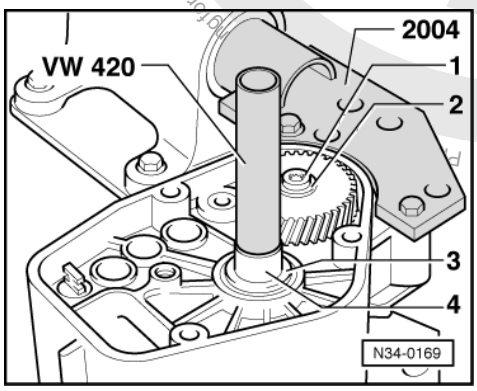

- -> Screw-in new 5th gear securing bolt -1- with dished spring -2-.

satelettronica

Installation position of dished spring for 5th gear securing bolt:

The outer diameter (concave side) faces 5th gear.

- Install thrust washer -3- for 5th gear sliding wheel.

Installation position:

Recess on thrust washer internal diameter faces towards needle roller bearing.

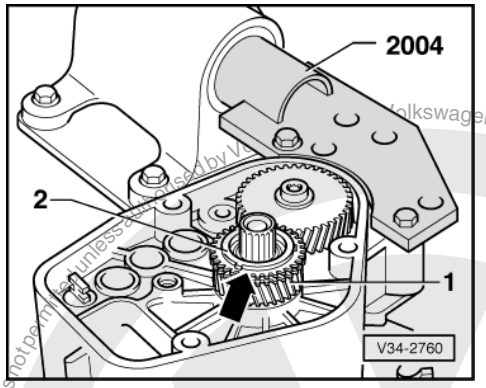

- Heat sleeve -4- for 5th gear needle roller bearing to approx. 100°C on a hot plate then drive on.
- -> Install 5th selector gear -1- with needle roller bearing
- Install spring (arrow) on 5th gear synchro-ring.
- Place 5th gear synchro-ring on gear wheel

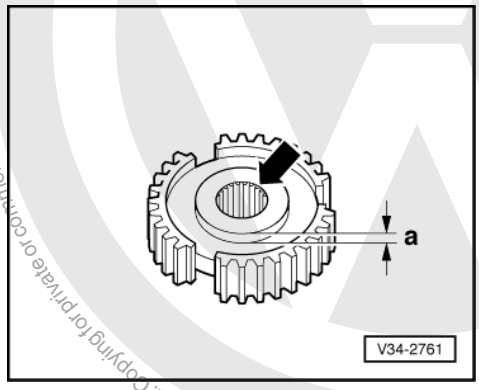

-> Installation position of 5th gear synchro-hub

The high shoulder of the synchro-hub (dimension -a-) faces towards gearbox housing.

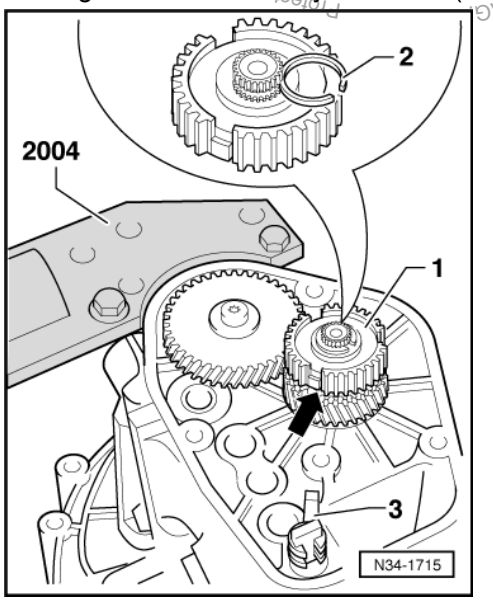

Volkswagen AG does not guarantee or accept any liability with respect to the correctness of information in this document. Copyright by Volkswagen AG. Copying for private or commercial purposes, in part or in whole, is not permitted unless authorised by Volkswagen AG.
satelettronica

- -> Drive on 5th gear synchro-hub -1- with tool 30-23.

Note:
When driving synchro-hub on ensure synchro-ring is free to move.
The locking piece (arrow) must sit in the synchro-ring recess.

- Determine size of new circlip -2-.
- Determine and insert circlip -the thickest one that just fits in-.

Available circlips

Thickness (mm)	Part No.
2.00	085 311 187
2.10	085 311 187 A
2.20	085 311 187 B
2.30	085 311 187 C
2.40	085 311 187 D
2.50	085 311 187 E
2.60	085 311 187 F

- Squeeze clip -3- together and insert on 5th gear selector rod.

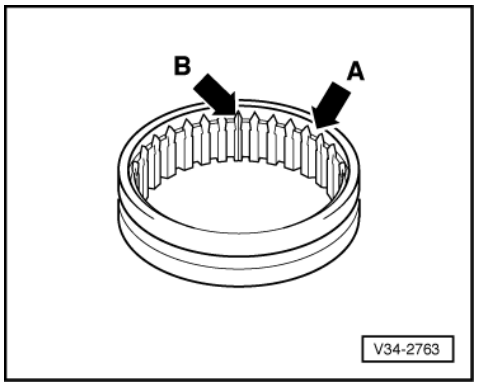

-> Installation position of 5th gear locking collar
Install teeth points (arrow A) towards 5th selector gear.

- The marked splines (arrow B) are to be inserted into the recesses on the synchro-hub.

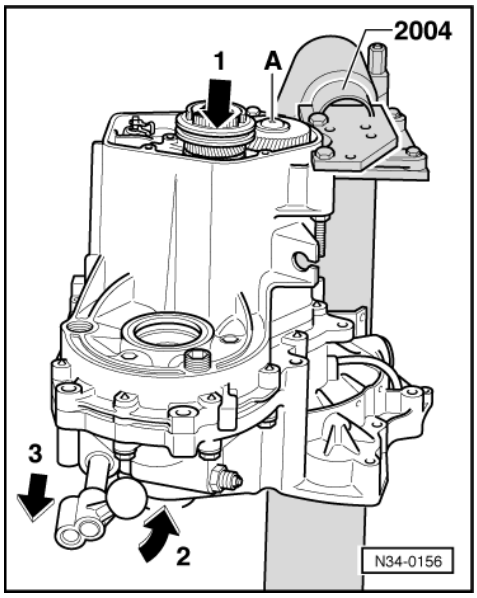

satelettronica
Protected by copyright. Copying for private or commercial purposes, in part or in whole, is not permitted unless authorised by Volkswagen AG. Volkswagen AG does not guarantee or accept any liability with respect to the correctness of information in this document. Copyright by Volkswagen AG.

- -> Tighten 5th gear bolt -A-, to do this select 5th (arrow 1) and 2nd gear (arrows 2 and 3).

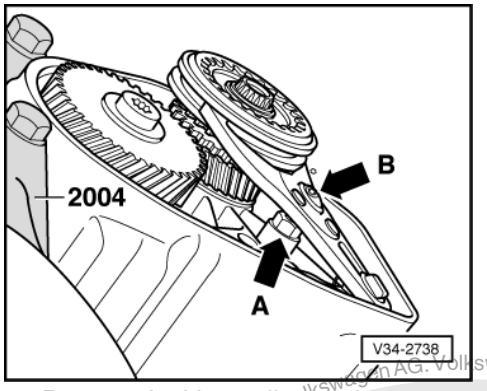

- Remove locking collar again.
- Insert locking collar together with 5th gear selector rod.
- -> Turn back lock nut (arrow A) below 5th gear selector rod.
- Screw in ball headed bolt (arrow B).

-> Adjusting 5th gear:

Basic setting

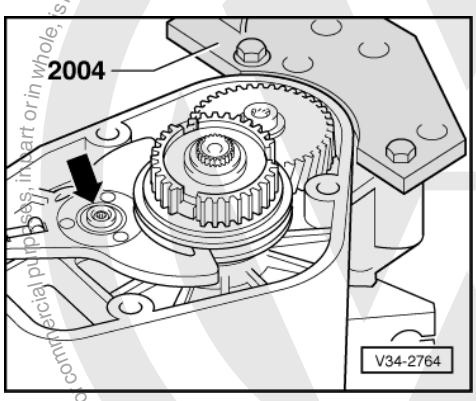

- Coat threads on ball head bolt with locking fluid D 000 600.
- Turn gearbox in installation position
- All selector rods in neutral.
- Loosen ball head bolt lock nut.
- -> Adjust ball head bolt (arrow) so that the locking collar is flush with the synchro-hub.

Fine adjustment

- Select 5th gear.

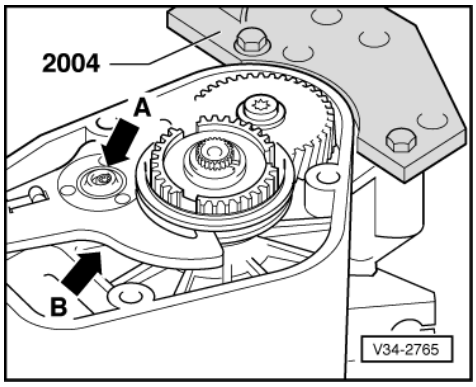

- -> Turn ball head bolt (arrow A) in so far so that there is no axial play in the locking collar groove for 5th gear selector fork.

Protected by copyright. Copyright by Volkswagen AG. Volkswagen AG does not guarantee or accept any liability with respect to the correctness of information in this document. Copyright by Volkswagen AG. Reproduction for commercial purposes, in part or in whole, is not permitted unless authorized by Volkswagen AG.
satelettronica

- Then turn ball head bolt (arrow A) back so that play can just be felt between locking collar and selector fork (approx.1/8 turn).
- Lock ball head bolt (arrow A) with lock nut (arrow B) below 5th gear fork to gearbox housing, ensuring that the ball head bolt has not turned.
- Disengage 5th gear. Locking collar must now be in the neutral position. Synchro-ring must move freely.
- Fit seal.
- Fit gearbox housing cover

5 - Servicing clutch housing

5.1 - Servicing clutch housing

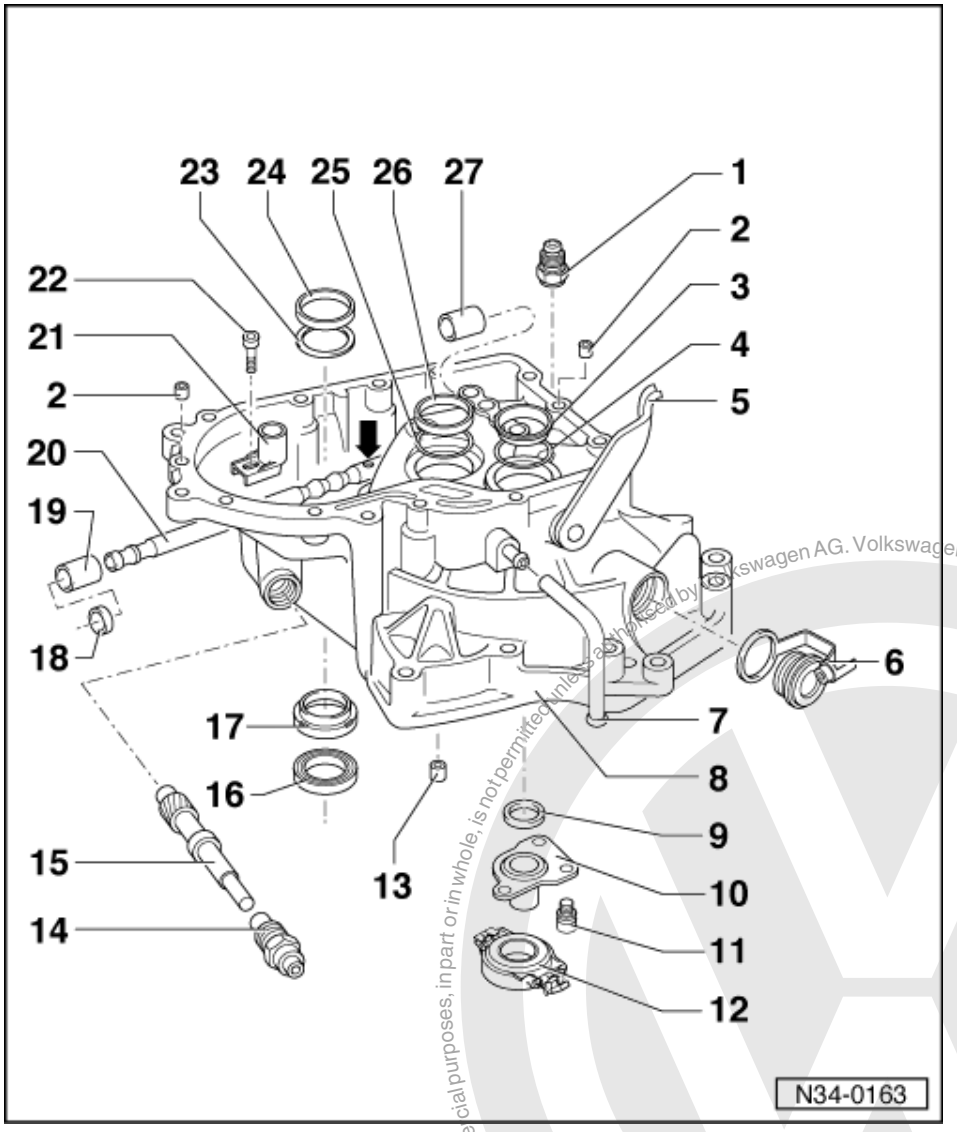

1 Locking bolt, 40 Nm
- For selector shaft

2 Dowel sleeve
- Qty. 2

3 Outer race/taper roller bearing
- For input shaft
- Removing and installing => Page 98

4 Shim
- For input shaft

Protected by copyright. Copying for private or commercial purposes, in part or in whole, is not permitted unless authorised by Volkswagen AG. Volkswagen AG does not guarantee or accept any liability with respect to the correctness of information in this document. Copyright by Volkswagen AG.
satelettronica

- Determining thickness => Page 104

5 Release shaft
- Removing and installing => Page 31

6 Sealing bolt with plug

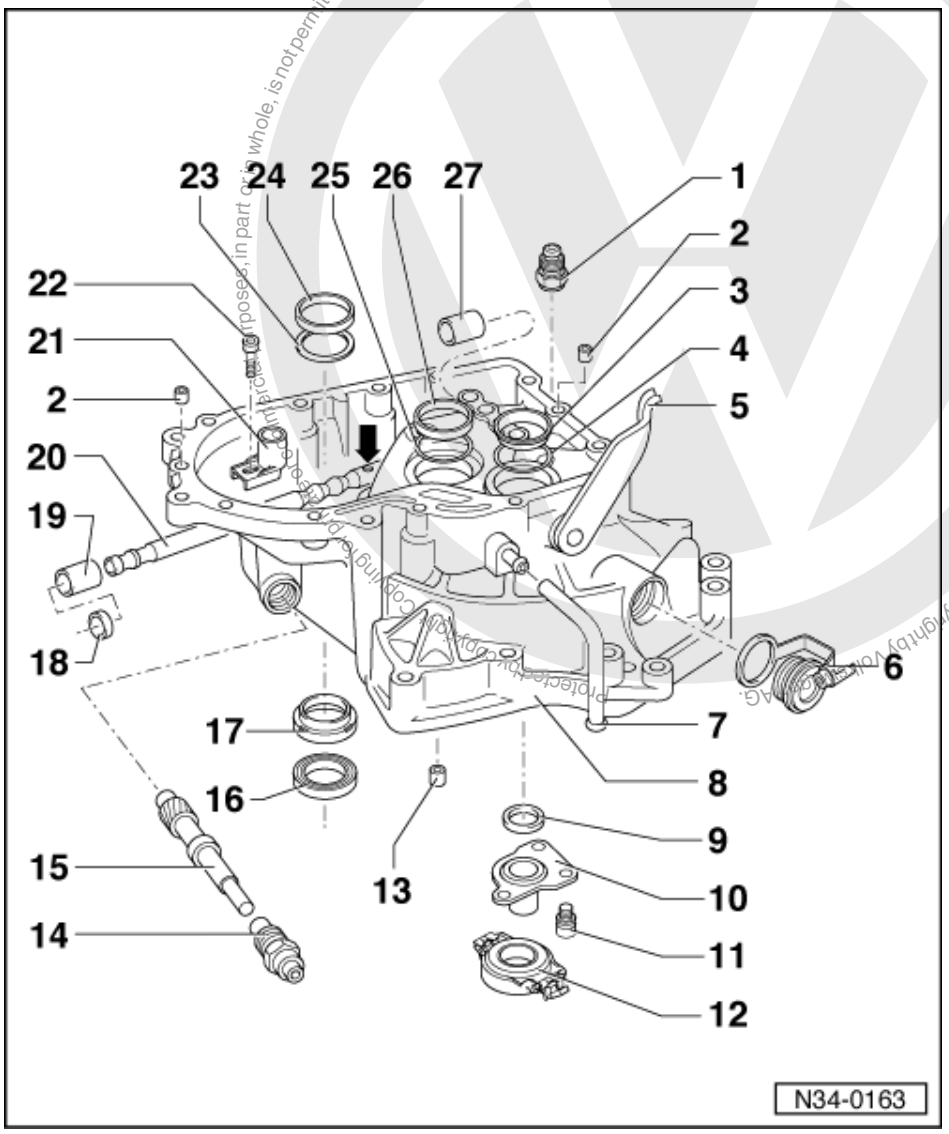

7 Breather pipe

8 Clutch housing
- If replaced: =>Observe adjustment overview, Page 139

9 Input shaft oil seal
- Removing => Fig. 1
- Installing => Fig. 2

10 Guide sleeve

11 Bolt, 18 Nm

12 Release bearing
- Removing and installing => Page 32

13 Mounting bush
- Removing => Fig. 3

satelettronica

- Installing => Fig. 4

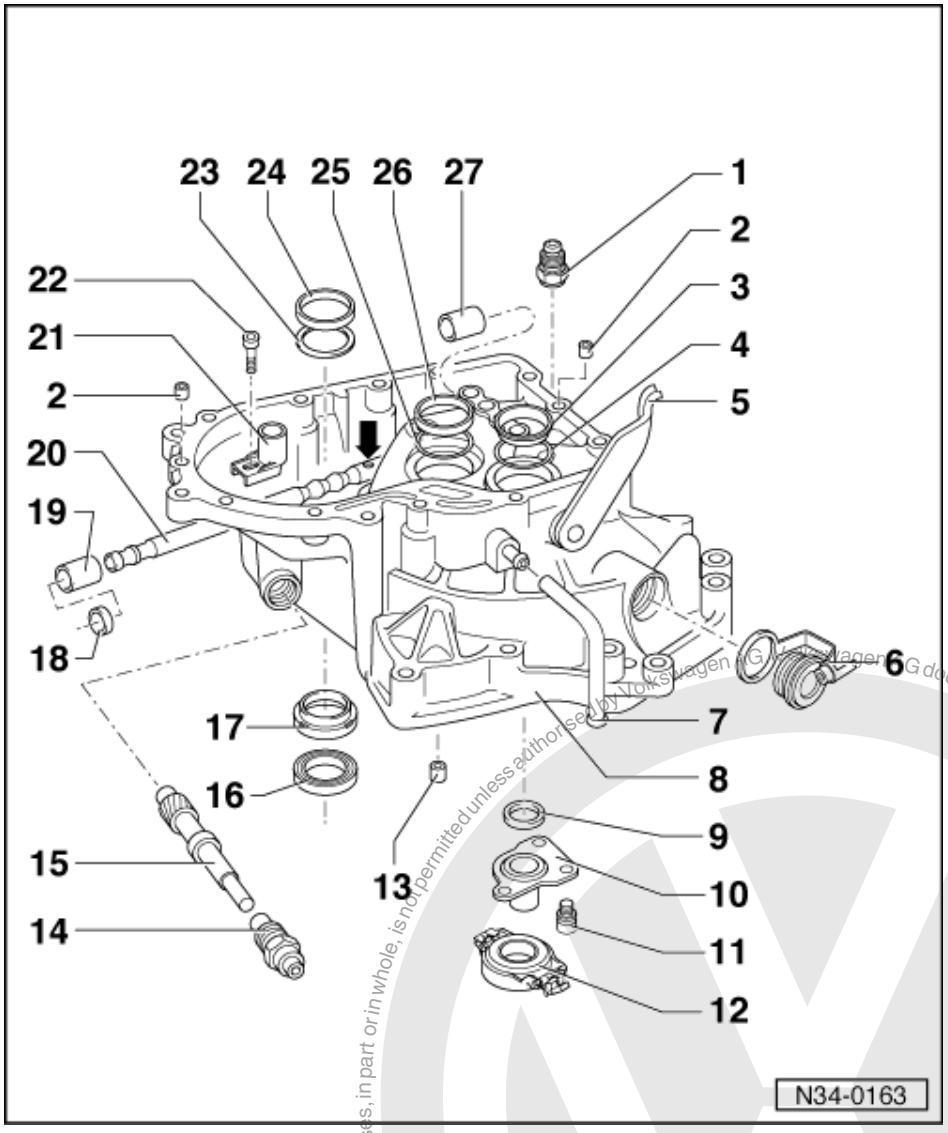

14 Guide bush

15 Drive shaft with pinion
- For speedometer

16 Flange shaft oil seal
- Removing => Fig. 5
- Installing => Fig. 6
- Renewing with gearbox installed => from Page 126

17 Sleeve
- For oil seal (Item 16)
- Removing => Fig. 7
- Installing => Fig. 8

18 Oil seal
- For selector shaft
- Carefully lever out using screwdriver => fig. 9
- Installing => fig. 10
- Can be renewed with gearbox installed =>page 126

Protected by copyright. Copying for private or commercial purposes, in part or in whole, is not permitted unless authorised by Volkswagen AG. Volkswagen AG does not guarantee or accept any liability with respect to the correctness of information in this document. Copyright by Volkswagen AG.
satelettronica

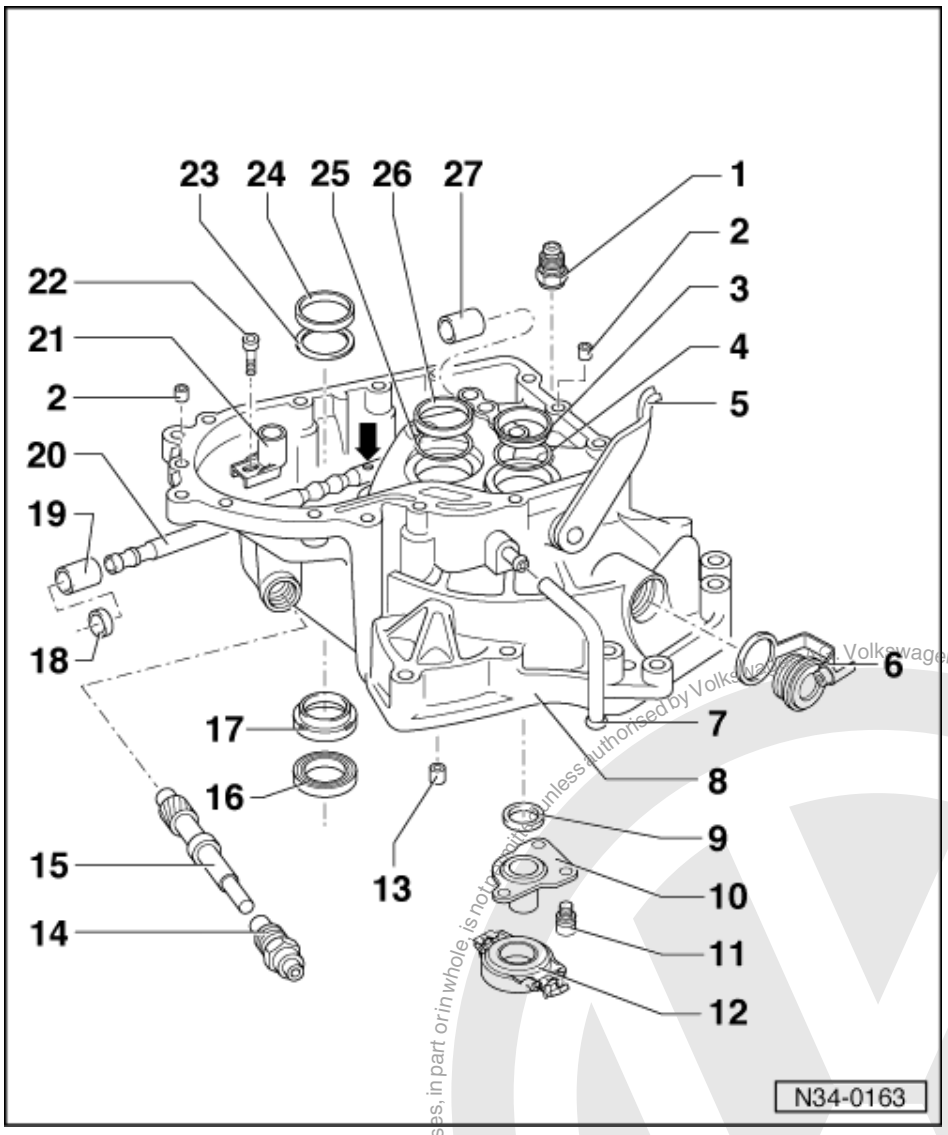

19 Front ball sleeve

- For selector shaft
- Removing and installing =>Fig. 11

20 Selector shaft

- Installation position: The countersunk (arrow) points towards selector sleeve (Item 21)
- Grease sliding surfaces with MoS2 grease
- Adjusting => Page 92

21 Selector sleeve

- Adjusting => Page 92

22 Bolt, 25 Nm

23 Shim

- For differential
- Determining thickness => Page 139

satelettronica
Protected by copyright. Copying for private or commercial purposes, in part or in whole, is not permitted unless authorised by Volkswagen AG. Volkswagen AG does not guarantee or accept any liability with respect to the correctness of information in this document. Copyright by Volkswagen AG.

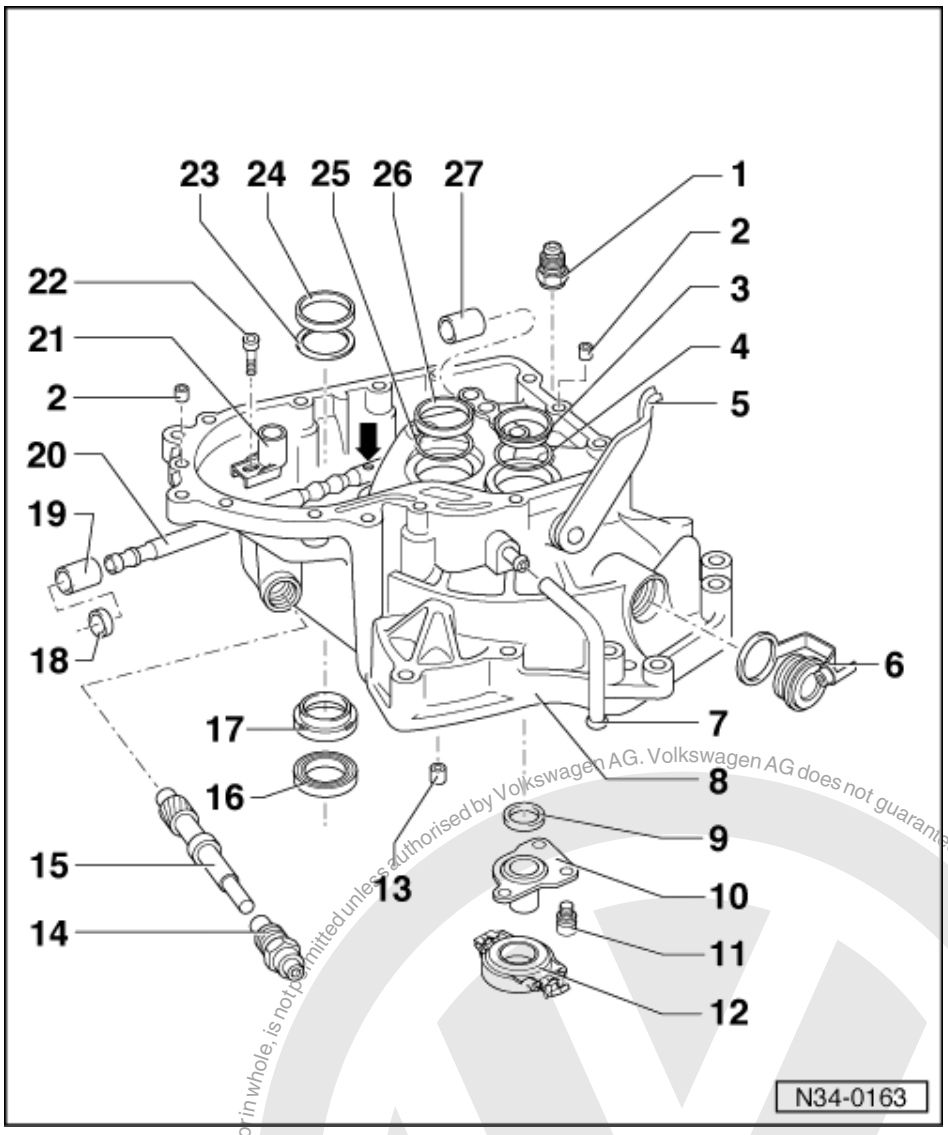

24 Outer race/taper roller bearing

- For differential
- Removing and installing
  => Page 129
- If replaced: Adjust differential
  => Page 139

25 Shim

- For output shaft
- Determining thickness => Page 122

26 Outer race/taper roller bearing

- For output shaft
- Removing and installing
  => Page 107

27 Rear ball sleeve

- For selector shaft
- Removing and installing
  =>Fig. 12

Protected by copyright. Copying for private or commercial purposes, in part or in whole, is not permitted unless authorised by Volkswagen AG. Volkswagen AG does not guarantee or accept any liability with respect to the correctness of information in this document. Copyright by Volkswagen AG.
satelettronica

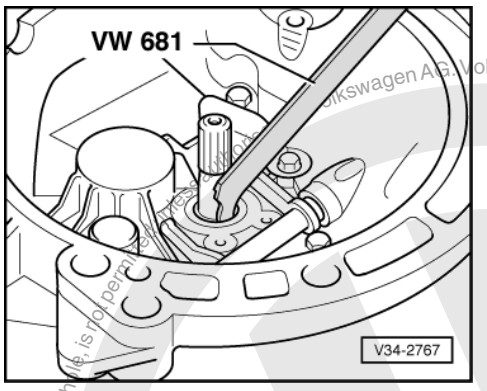

-> Fig.1 Pulling out output shaft oil seal.

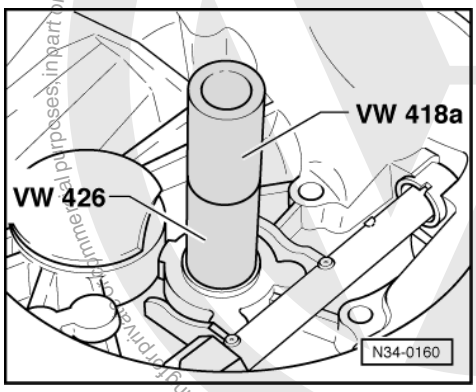

-> Fig.2 Driving in output shaft oil seal.

Installation position:
2.5 mm below housing upper surface.

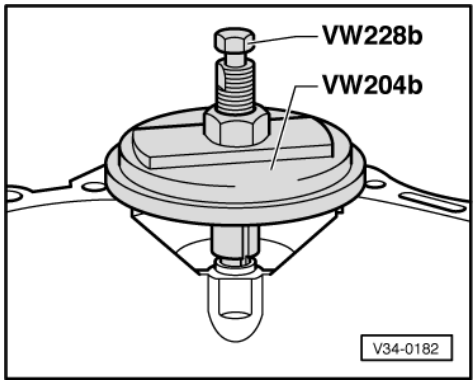

-> Fig.3 Pulling out starter bush.

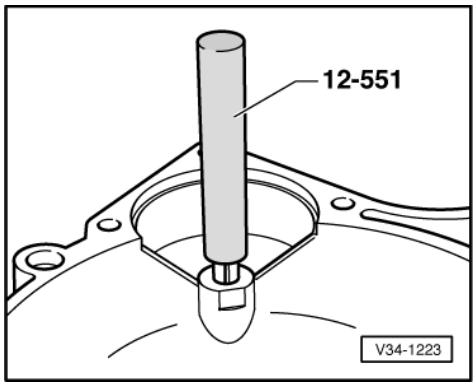

Volkswagen AG. Volkswagen AG does not guarantee or accept any liability with respect to the correctness of information in this document. Copyright by Volkswagen AG.
Protected by copyright. Copying for private or commercial purposes, in part or in whole, is not permitted unless authorised by Volkswagen AG.
satelettronica

-> Fig.4 Driving in starter bush.
- Lubricate bush mounting before driving in.

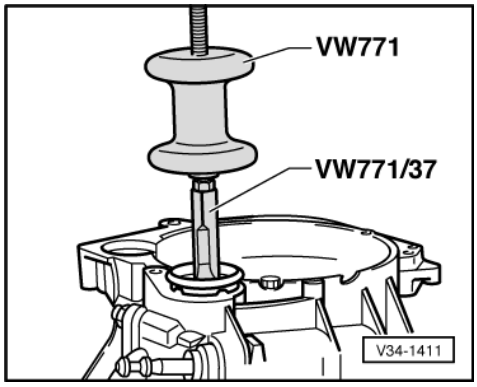

-> Fig.5 Pulling in flange shaft oil seal.

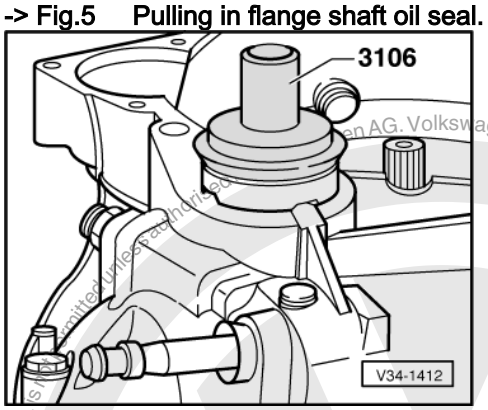

-> Fig.6 Driving in flange shaft oil seal.
Use the relevant side of the tool for the seals.
Fill space between seal and dust lip with multi-purpose grease.

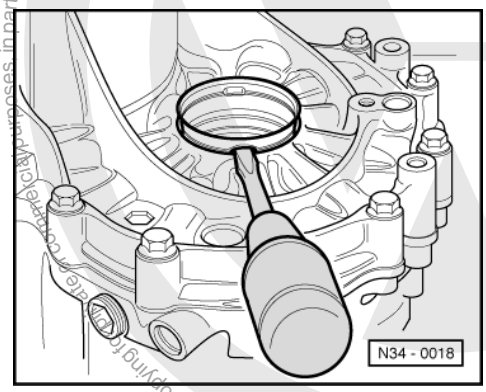

-> Fig.7 Lever out sleeve with screwdriver

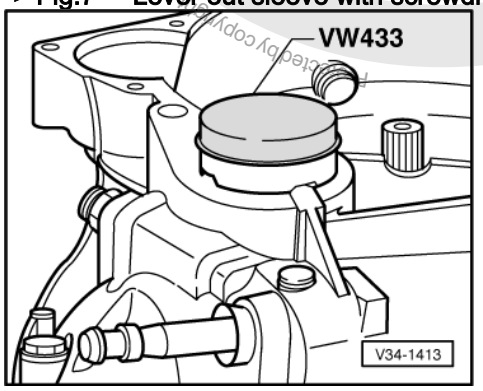

Copyright by Volkswagen AG. Volkswagen AG does not guarantee or accept any liability with respect to the correctness of information in this document.
Copying for private or commercial purposes, in part or in whole, is not permitted unless authorised by Volkswagen AG.
satelettronica

-> Fig.8 Driving in sleeve

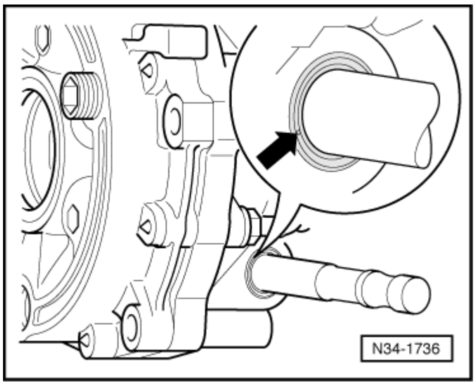

-> Fig.9 Levering out seal using screwdriver

- Remove selector shaft.
- To prevent damage to the selector shaft, wrap thin layer of insulation tape around it.
- Push selector shaft in onto stop.
- Carefully punch a hole in the middle of the seal (arrow) using a small screwdriver.
- Then lever out the seal using a slightly larger screwdriver.

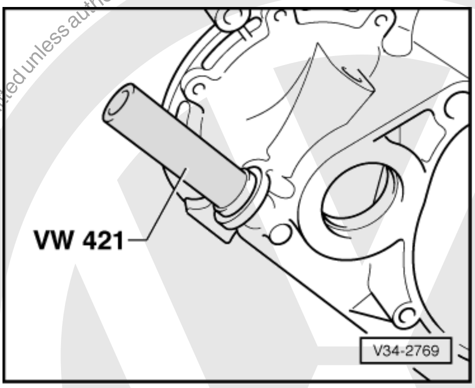

- Remove insulation tape and check selector shaft for damage.

-> Fig.10 Press in seal onto stop

- Lightly oil outer circumference of oil seal.
- Fill space between sealing lip and dust lip with grease G 052 128 A1.
- Carefully push seal over chamfer of selector shaft in a twisting motion.

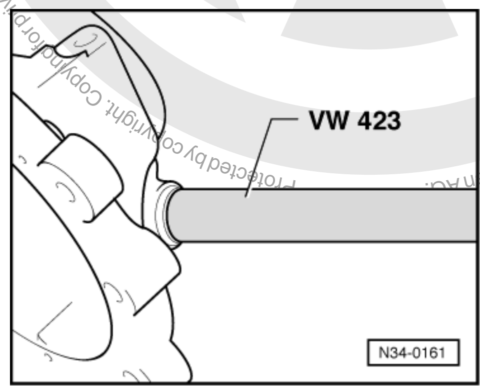

Protected by copyright. Copying for private or commercial purposes, in part or in whole, is not permitted unless authorised by Volkswagen AG. Volkswagen AG does not guarantee or accept any liability with respect to the correctness of information in this document. Copyright by Volkswagen AG.

satelettronica

-> Fig.11 Removing and installing front ball sleeve

Installation position:

10 mm below housing upper surface.

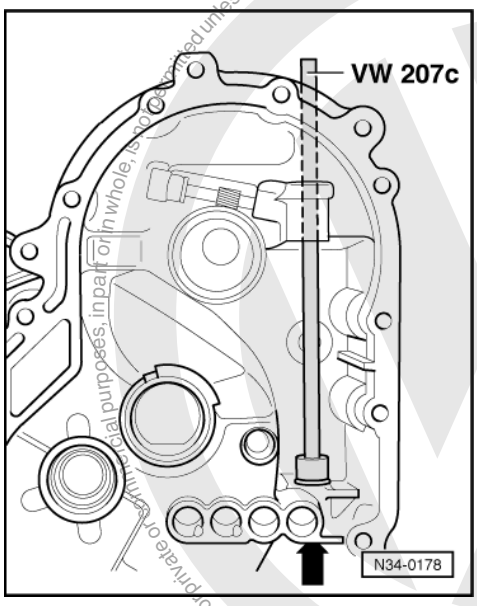

-> Fig.12 Removing and installing rear ball sleeve

Installation position:

The ball sleeve must be flush with the rear area of the mounting eye (arrow).

6 - Adjusting selector finger and selector sleeve

6.1 - Adjusting selector finger and selector sleeve

Note:

The adjustment is only be carried out if selector finger, selector sleeve, clutch housing, gearbox housing, inner selector lever or inner selector lever locking mechanism has been changed.

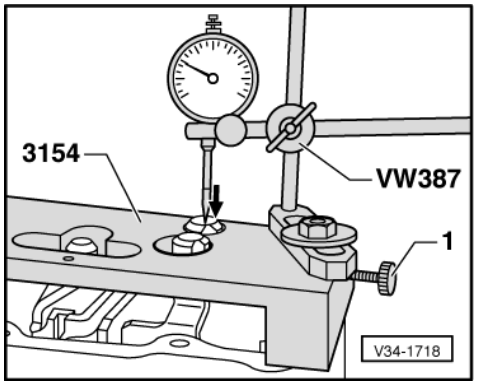

- -> Fit gauge 3154 with dowel sleeves onto gearbox housing.
- Secure mounting VW 387 with gauge and gauge extension.
- Fit gauge onto reverse gear selector rod and set with 1 mm preload.

Protected by copyright. Copying for private or commercial purposes, in part or in whole, is not permitted unless authorised by Volkswagen AG. Volkswagen AG does not guarantee or accept any liability with respect to the correctness of information in this document. Copyright by Volkswagen AG.

satelettronica

- Push selector rod in direction of arrow and set gauge to 0.
- Press selector rod in opposite direction, from below, and read off measurement (example: 0.70 mm).
- Arrest selector rod in central position (example: 0.70 mm / 2 = 0.35 mm). To do this push selector rod from below until the value 0.35 mm is achieved and then clamp selector rod with bolt -1-.

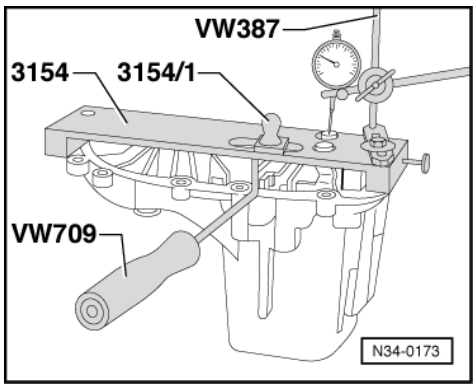

- -> Pull selector finger with VW 709 into reverse gear gate and fit measuring finger 3154/1.

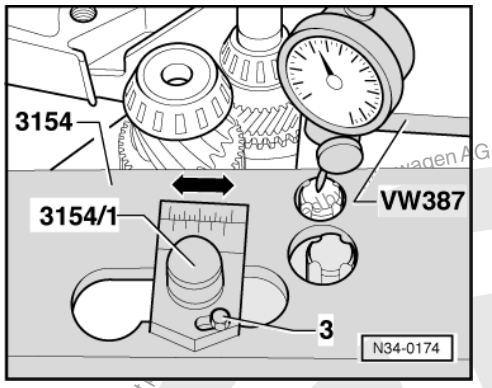

- -> Push measuring finger from stop to stop and read off the value on the measurement scale (example: 0.60 mm).
- Half measuring value (example: 0.60 mm / 2 = 0.30 mm) and tighten bolt -3-.
- Remove mounting VW 387.

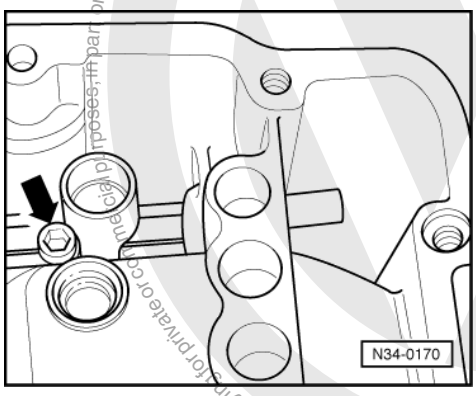

- -> Loosen clamping bolt (arrow) only so far as to allow the selector sleeve to be moved slightly on the inner selector lever.
- Place inner selector lever in central stop position.

Protected by copyright. Copyright for private or commercial purposes, in part or in whole, is only permitted with the express consent of Volkswagen AG. Volkswagen AG does not guarantee or accept any liability with respect to the correctness of information in this document. Copyright by Volkswagen AG.
satelettronica

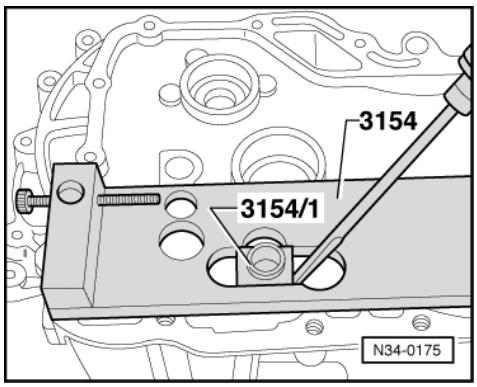

- -> Insert dowel sleeves into clutch housing and fit gauge 3154 on the clutch housing, turned through 180° so that the selector finger and selector sleeves align.
- Tighten selector sleeve clamping bolt.

Protected by copyright. Copying for private or commercial purposes, in part or in whole, is not permitted unless authorised by Volkswagen AG. Volkswagen AG does not guarantee or accept any liability with respect to the correctness of information in this document. Copyright by Volkswagen AG.

satelettronica

35 - Gears, Shafts

1 - Dismantling and assembling input shaft

1.1 - Dismantling and assembling input shaft

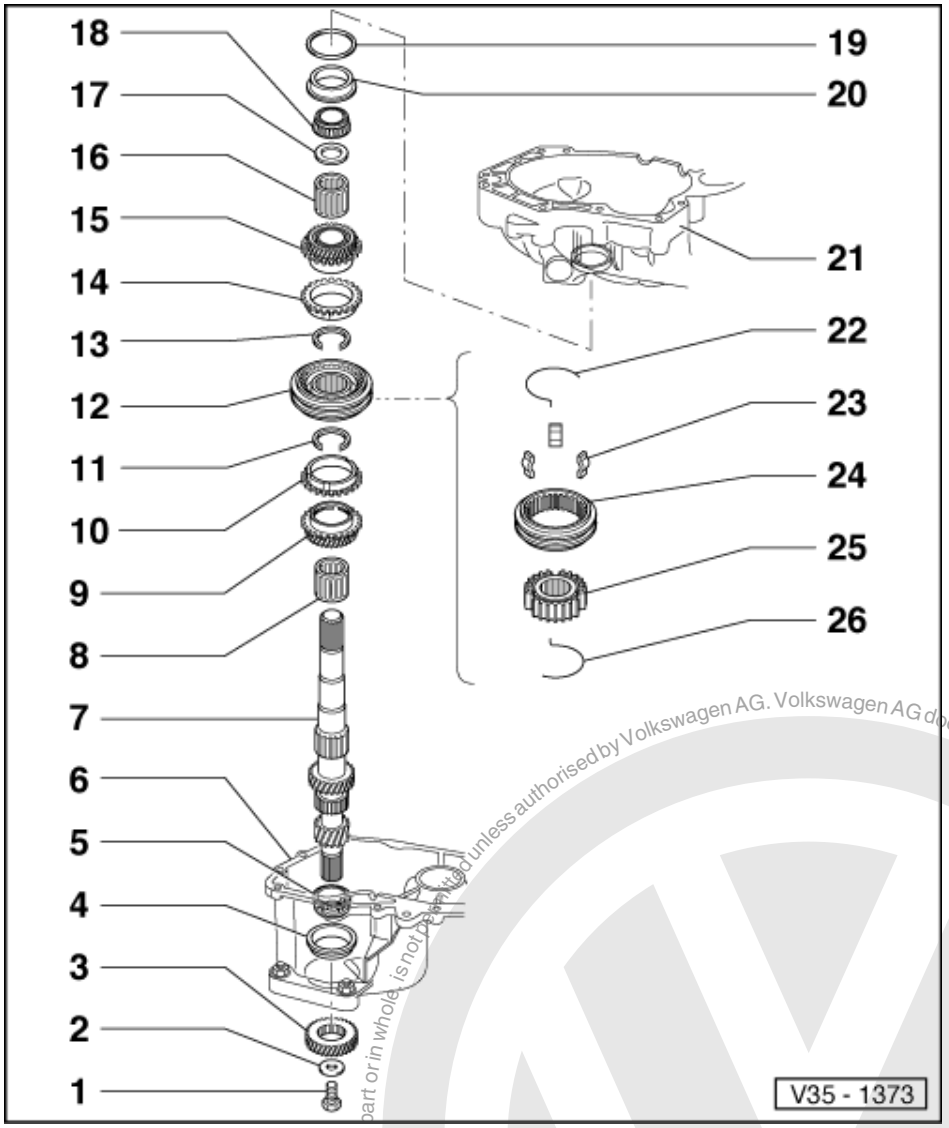

Notes:

- When installing new gears, consult technical data =>page 2 .
- If the position of the taper roller bearings is affected when exchanging parts, the input shaft must be re-adjusted. See adjustment overview => Page 139

1 Torx socket head bolt M 8, 40 Nm
- Fitted piece on bolt head locates dished spring.

2 Dished washer

3 5th gear
- Removing and installing

Protected by copyright. Copying for private or commercial purposes, in part or in whole, is not permitted unless authorised by Volkswagen AG. Volkswagen AG does not guarantee or accept any liability with respect to the correctness of information in this document. Copyright by Volkswagen AG.
satelettronica

=> from Page 70

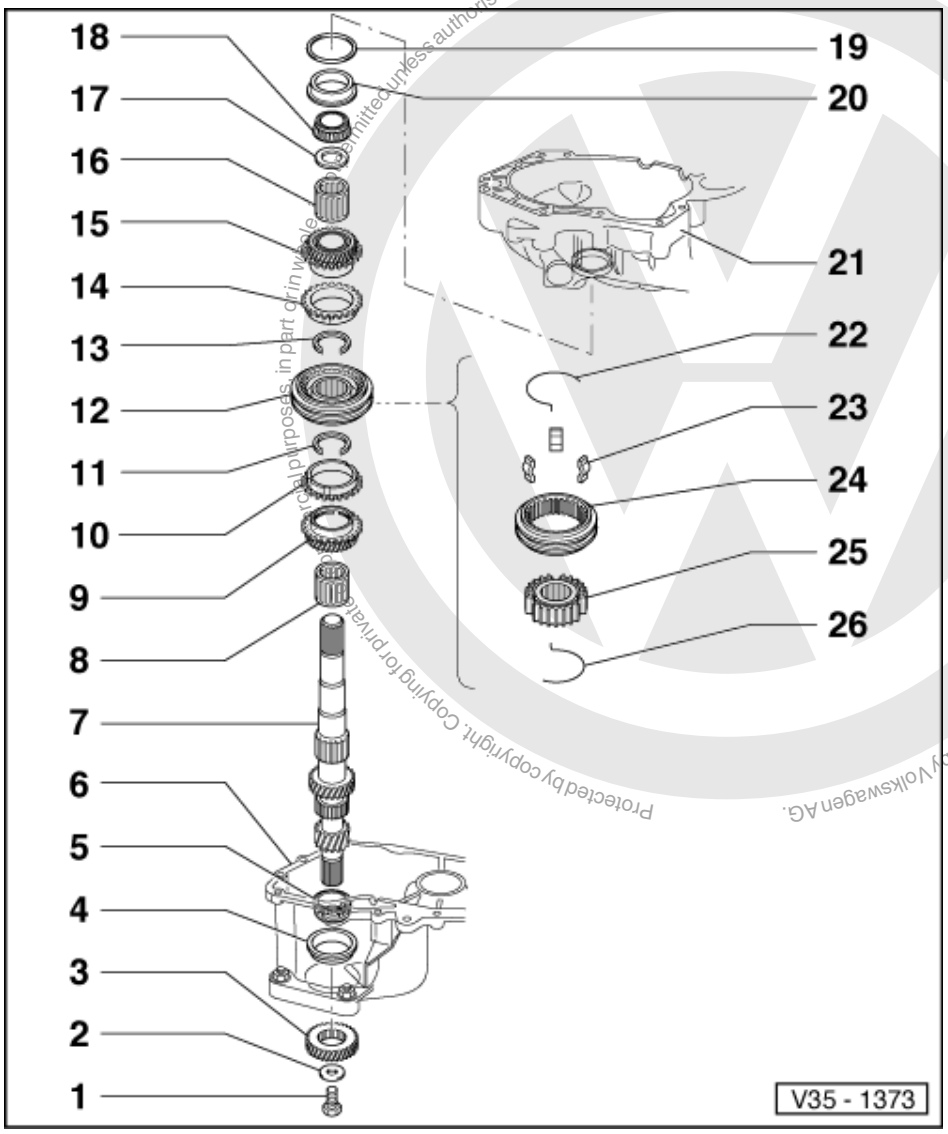

4 Taper roller bearing outer race
- Pressing out => Fig. 1
- Pressing in => Fig. 2

5 Taper roller bearing inner race
- Pressing off => Fig. 3
- Pressing on => Fig. 4

6 Gearbox housing

7 Input shaft
- Adjusting => Page 104

8 Needle roller bearing
- Lubricate before inserting

9 Selector gear for 3rd gear
- Pressed off with locking collar/3rd and 4th gear synchro-hub => Fig. 8 and pressed on => Fig.13

Protected by copyright. Copying for private or commercial purposes, in part or in whole, is not permitted unless authorised by Volkswagen AG. Volkswagen AG does not guarantee or accept any liability with respect to the correctness of information in this document. Copyright by Volkswagen AG.
satelettronica

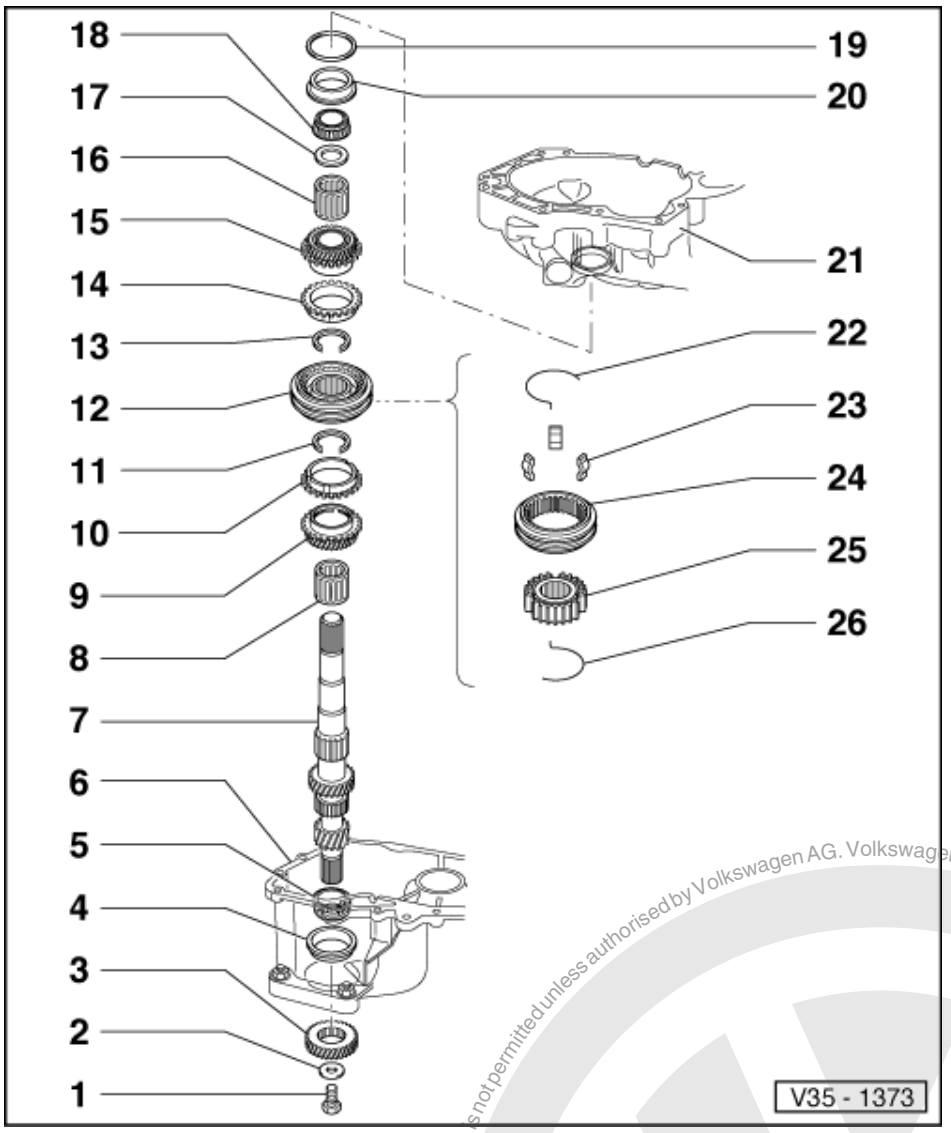

10 3rd gear synchro-ring
- Checking for wear => Fig. 10

11 Circlip
- Pressing out => Fig. 7
- Inserting => Fig. 9

12 Locking collar with 3rd and 4th gear synchro-hub
- Parts are paired
- Pressing off => Fig. 8
- Assembling => Fig. 11 and Fig. 12
- Pressing on => Fig.13

13 Circlip
- Pushing out => Fig. 7
- Inserting => Fig. 9

14 4th gear synchro-ring
- Checking for wear => Fig. 10

Protected by copyright. Copying for private or commercial purposes, in part or in whole, is not permitted unless authorised by Volkswagen AG. Volkswagen AG does not guarantee or accept any liability with respect to the correctness of information in this document. Copyright by Volkswagen AG.
satelettronica

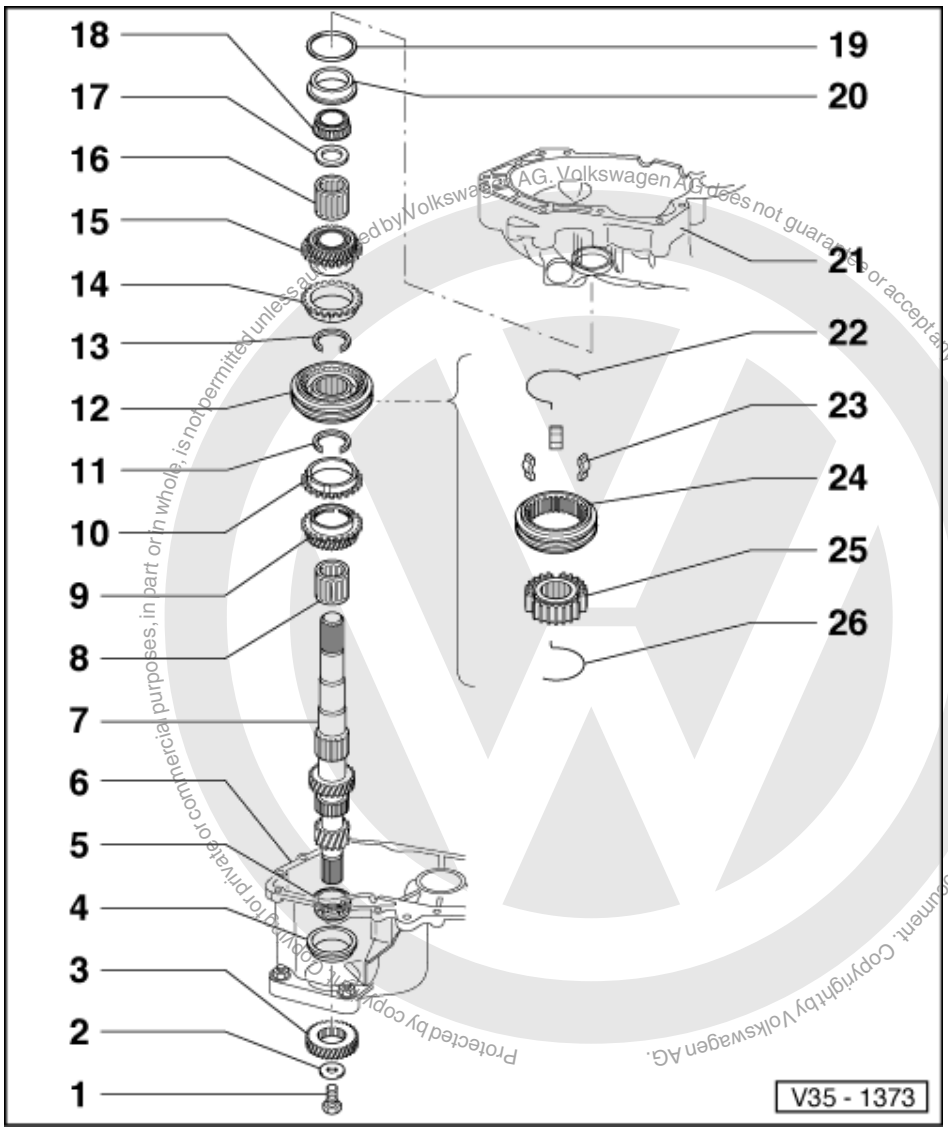

15 Selector gear for 4th gear
16 Needle roller bearing
- Lubricate before inserting

17 Thrust washer
18 Taper roller bearing inner race
- Can be removed without using tools

19 Shim
- Determining thickness => Page 104

20 Taper roller bearing outer race
- Pulling out => Fig. 5
- Pressing in => Fig. 6

21 Clutch housing
22 Spring
- Installation position => Fig. 12

satelettronica

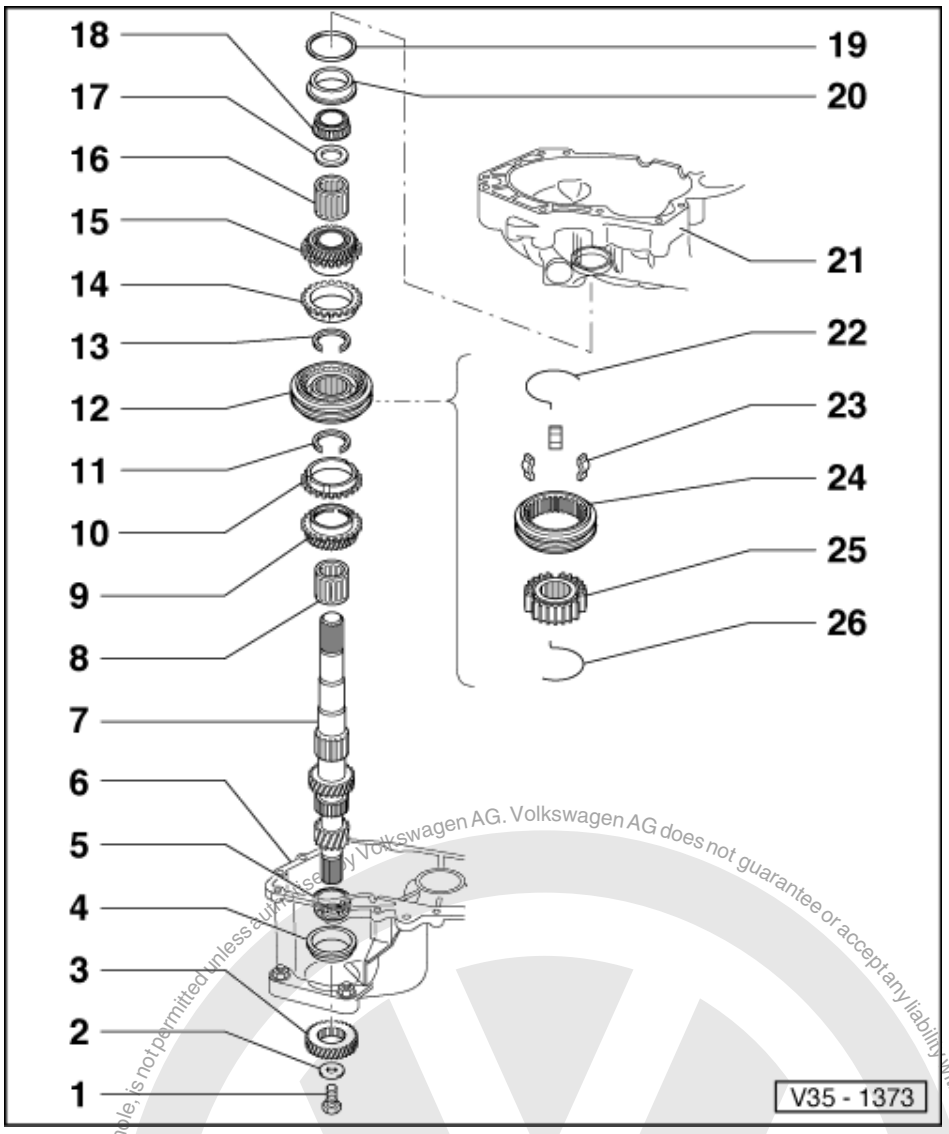

23 Locking pieces (Qty. 3)
24 Locking collar
25 Synchro-hub
26 Spring

- Installation position => Fig. 12

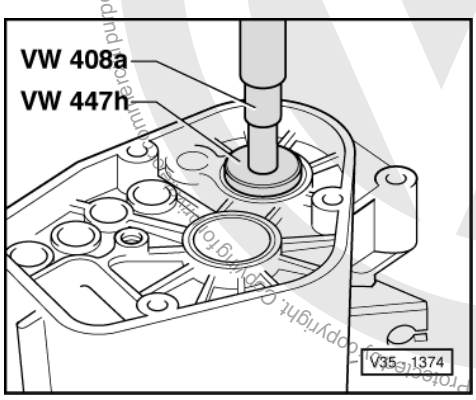

satelettronica

-> Fig.1 Pressing out taper roller bearing outer race

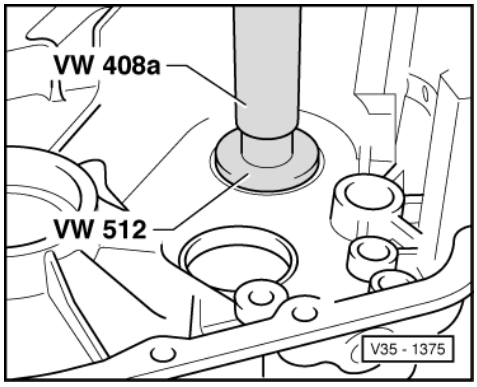

-> Fig.2 Pressing in taper roller bearing outer race

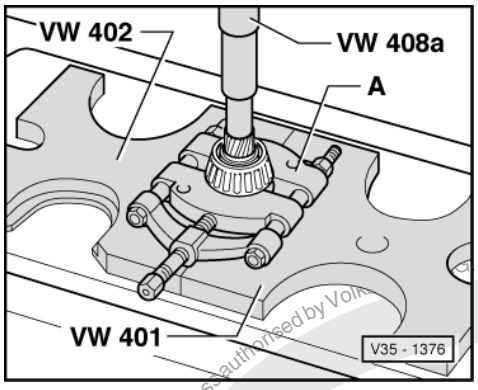

-> Fig.3 Pressing off taper roller bearing inner race

A - Separating device 22 ... 115 mm, e.g. Kukko 17/2

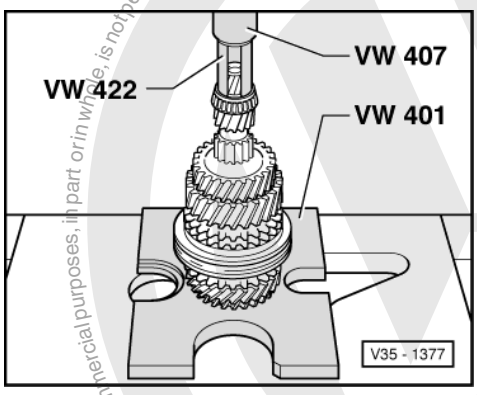

-> Fig.4 Pressing on taper roller bearing inner race

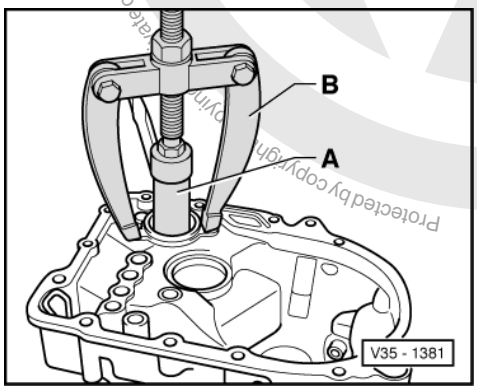

Volkswagen AG does not guarantee or accept any liability with respect to the correctness of information in this document. Copyright by Volkswagen AG.
Protected by copyright. Copying for private or commercial purposes, in part or in whole, is not permitted unless authorised by Volkswagen AG.
satelettronica

-> Fig.5 Pulling out taper roller bearing outer race

A - Internal extractor 37 ... 46 mm, e.g. Kukko 21/6

B - Counter support, e.g. Kukko 22/2

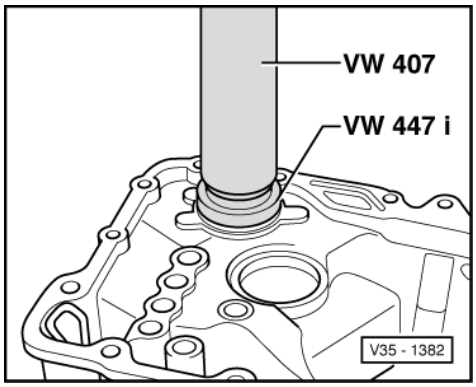

-> Fig.6 Pressing in taper roller bearing outer race

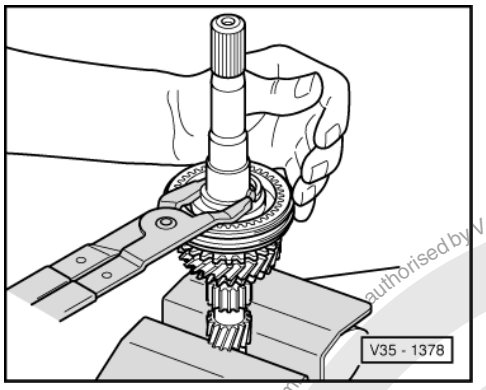

-> Fig.7 Pushing circlip out of groove

Warning!
Prevent uncontrolled springing of circlip. Danger of accident!

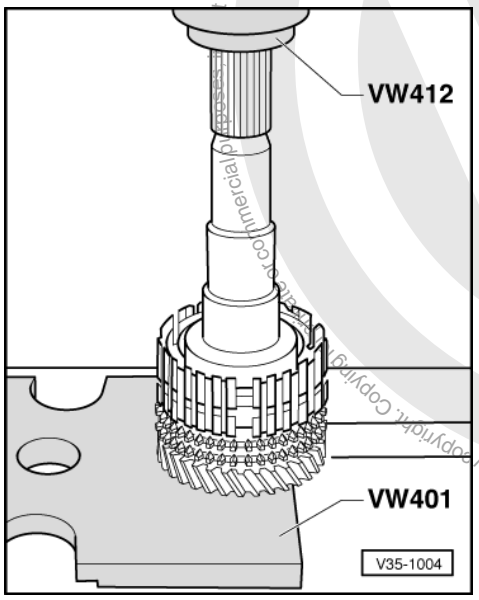

satelettronica
Protected by copyright. Copyright by Volkswagen AG.
Copyright by Volkswagen AG. Volkswagen AG does not guarantee or accept any liability with respect to the correctness of information in this document.

-> Fig.8 Pressing off synchro-hub

- After removing securing ring press off synchro-hub and 3rd selector gear.

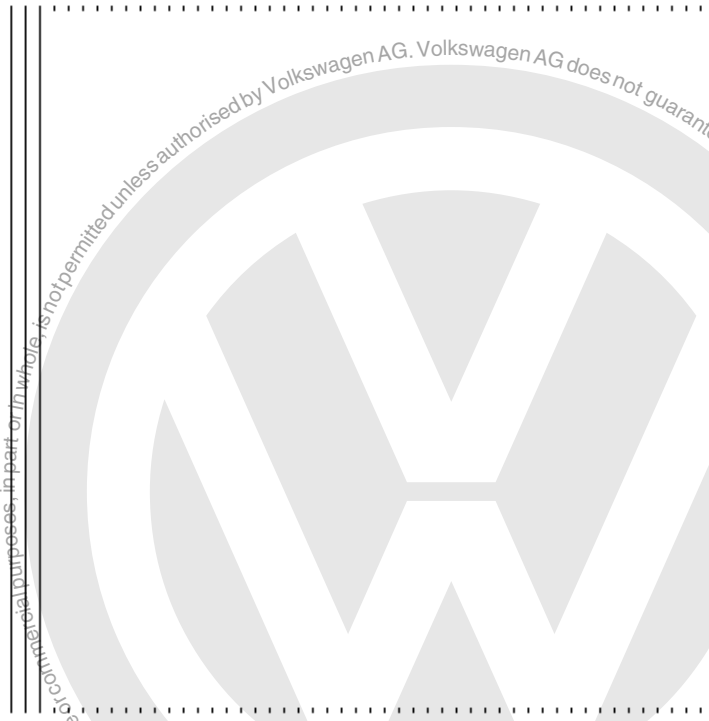

-> Fig.9 Inserting circlip

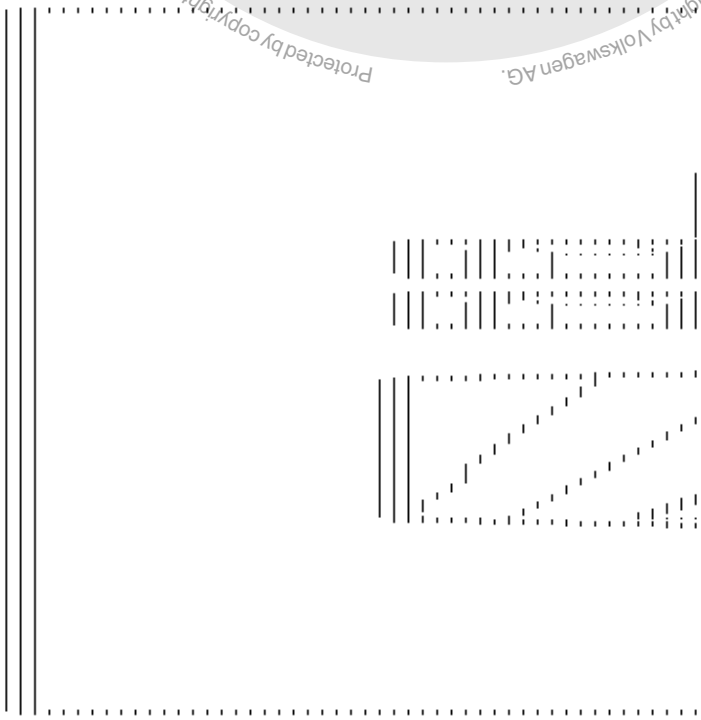

Protected by copyright. Copying for private or commercial purposes, in part or in whole, is not permitted unless authorised by Volkswagen AG. Volkswagen AG does not guarantee or accept any liability with respect to the correctness of information in this document. Copyright by Volkswagen AG.

satelettronica

-> Fig.10 Checking synchro-ring for wear

- Press synchro-ring onto the gear cone and measure gap "a" with feeler gauge.

Gap "a"	New dimension	Wear limit
3rd and 4th gear	1.1 ... 1.7 mm	0.5 mm

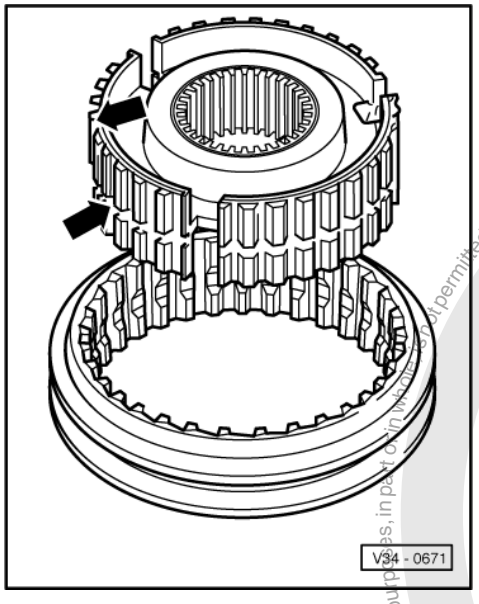

-> Fig.11 Assembling locking collar and synchro-hub for 3rd and 4th gear

Installation position:

The shorter teeth below the circumferential groove (lower arrow) faces towards 3rd gear.

The groove on the face of the gear (upper arrow) faces towards 4th gear.

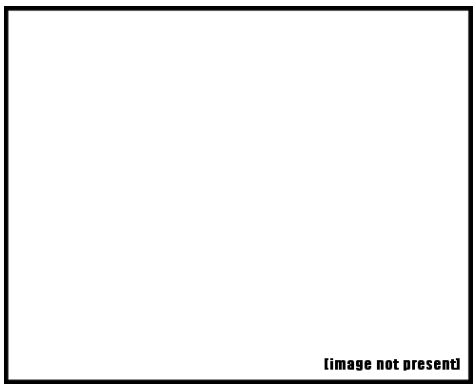

-> Fig.12 Locking collar/synchro-hub assembled

• Locking collar is pushed over synchro-hub.

- Insert locking pieces and install springs 120° off-set. The angled end of the spring must locate in the hollow locking piece.

Protected by copyright. Copying for private or commercial purposes, in part or in whole, is not permitted unless authorised by Volkswagen AG. Volkswagen AG does not guarantee or accept any liability with respect to the correctness of information in this document. Copyright by Volkswagen AG.
satelettronica

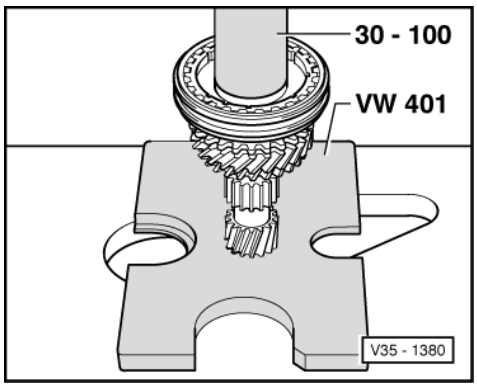

-> Fig.13 Pressing on 3rd and 4th gear synchro-hub with locking collar

2 - Adjusting input shaft

2.1 - Adjusting input shaft

(Determining thickness of shim for input shaft)
It is only necessary to readjust the input shaft when
- Gearbox housing
- Clutch housing
- Input shaft

or the
- Taper roller bearings

is renewed.
Adjustment overview => Page 139

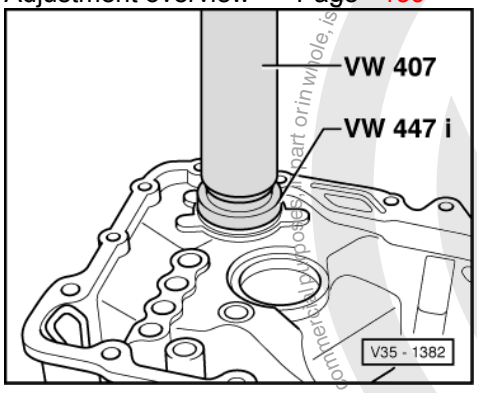

- -> Press taper roller bearing outer race, without shim, into gearbox housing onto stop.
- Install input shaft in gearbox housing and assemble clutch housing. Tighten hexagon head bolts to 25 Nm.

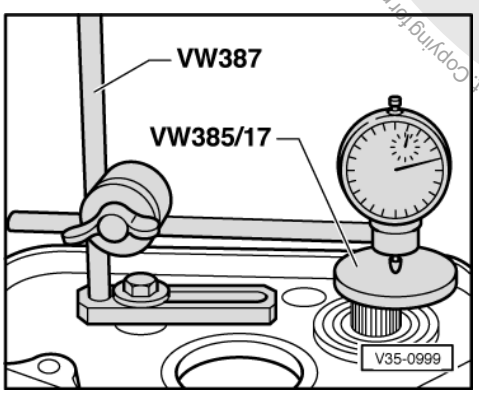

Protected by copyright. Copying for private or commercial purposes, in part or in whole, is not permitted unless authorised by Volkswagen AG. Volkswagen AG does not guarantee or accept any liability with respect to the correctness of information in this document. Copyright by Volkswagen AG.
satelettronica

- -> Fit measuring appliance and D.T.I. (3 mm measuring range).
- Before taking any measurements, rotate input shaft to allow bearings to settle. Set dial gauge to "O" with 1 mm preload.

Note:

This preparation is to be repeated for each subsequent measurement, otherwise the gauge will not return to the starting position.

- Press input shaft in direction of D.T.I.
- Read off and note clearance indicated on D.T.I. (example 1.21).

Note:

D.T.I. does not return to original position.

- Determine thickness of shim from table => Page 105 .
- Remove input shaft and pull taper roller bearing outer race out of clutch housing => Page 101 , Fig. 5 .

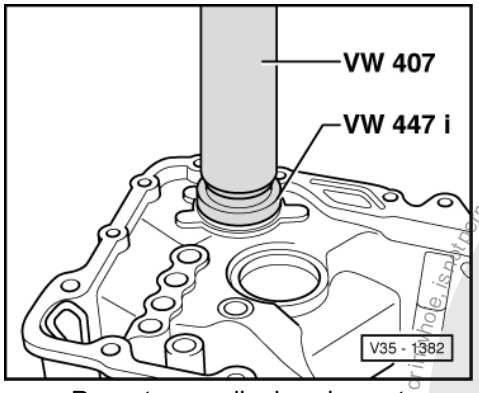

- -> Press taper roller bearing outer race together with selected shim (in example 1.20 mm) into clutch housing.
- Insert input shaft into gearbox housing and assemble clutch housing and tighten hexagon head bolts to 25 Nm.

Table of shims

Measured	Shim	
measured value (mm)	Thickness (mm)	Part No.
... 0.68 0.68 ... 0.73 0.74 ... 0.78	0.65 0.70 0.75	085 311 391 085 311 391 A 085 311 391 B
0.79 ... 0.83 0.84 ... 0.88 0.89 ... 0.93	0.80 0.85 0.90	085 311 391 C 085 311 391 D 085 311 391 E
0.94 ... 0.98 0.99 ... 1.03 1.04 ... 1.08	0.95 1.00 1.05	085 311 391 F 085 311 391 G 085 311 391 H
1.09 ... 1.13 1.14 ... 1.18 1.19 ... 1.23	1.10 1.15 1.20	085 311 391 I 085 311 391 K 085 311 391 L
1.24 ... 1.28 1.29 ... 1.33 1.34 ... 1.38	1.25 0.65 + 0.65 0.65 + 0.70	085 311 391 M 085 311 391/391 085 311 391 + A
1.39 ... 1.43 1.44 ... 1.48 1.49 ... 1.53	0.70 + 0.70 0.70 + 0.75 0.75 + 0.75	085 311 391 A + A 085 311 391 A + B 085 311 391 B + B

Protected by copyright. Copying for private or commercial purposes, in part or in whole, is not permitted unless authorised by Volkswagen AG. Volkswagen AG does not guarantee or accept any liability with respect to the correctness of information in this document. Copyright by Volkswagen AG.
satelettronica

Measured	Shim	
1.54 ... 1.58	0.75 + 0.80	085 311 391 B + C
1.59 ... 1.63	0.80 + 0.80	085 311 391 C + C
1.64 ... 1.68	0.80 + 0.85	085 311 391 C + D
1.69 ... 1.75	0.85 + 0.85	085 311 391 D + D

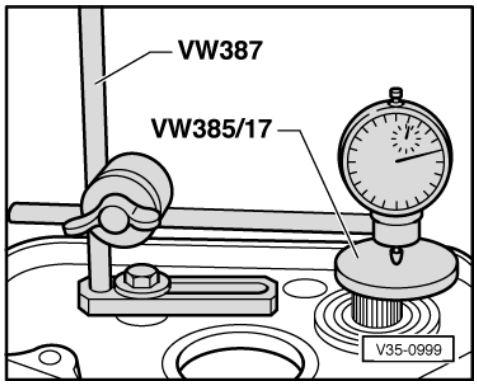

Carrying out check measurement

- -> Install measuring appliance and D.T.I.
- Rotate input shaft so that the taper roller bearings settle.
- Zero D.T.I. with 1 mm of preload.
- Press input shaft in direction of D.T.I.
- Bearing play should be min. 0.01 ... max. 0.12 mm.

Note:

If the bearing clearance cannot be measured, but input shaft play is perceptible and the input shaft turns freely, the adjustment is acceptable.

- Frictional moment max. 20 Ncm.

Copyright by Volkswagen AG. Volkswagen AG does not guarantee or accept any liability with respect to the correctness of information in this document. Copying for private or commercial purposes, in part or in whole, is not permitted unless authorised by Volkswagen AG.
satelettronica

3 - Dismantling and assembling output shaft

3.1 - Dismantling and assembling output shaft

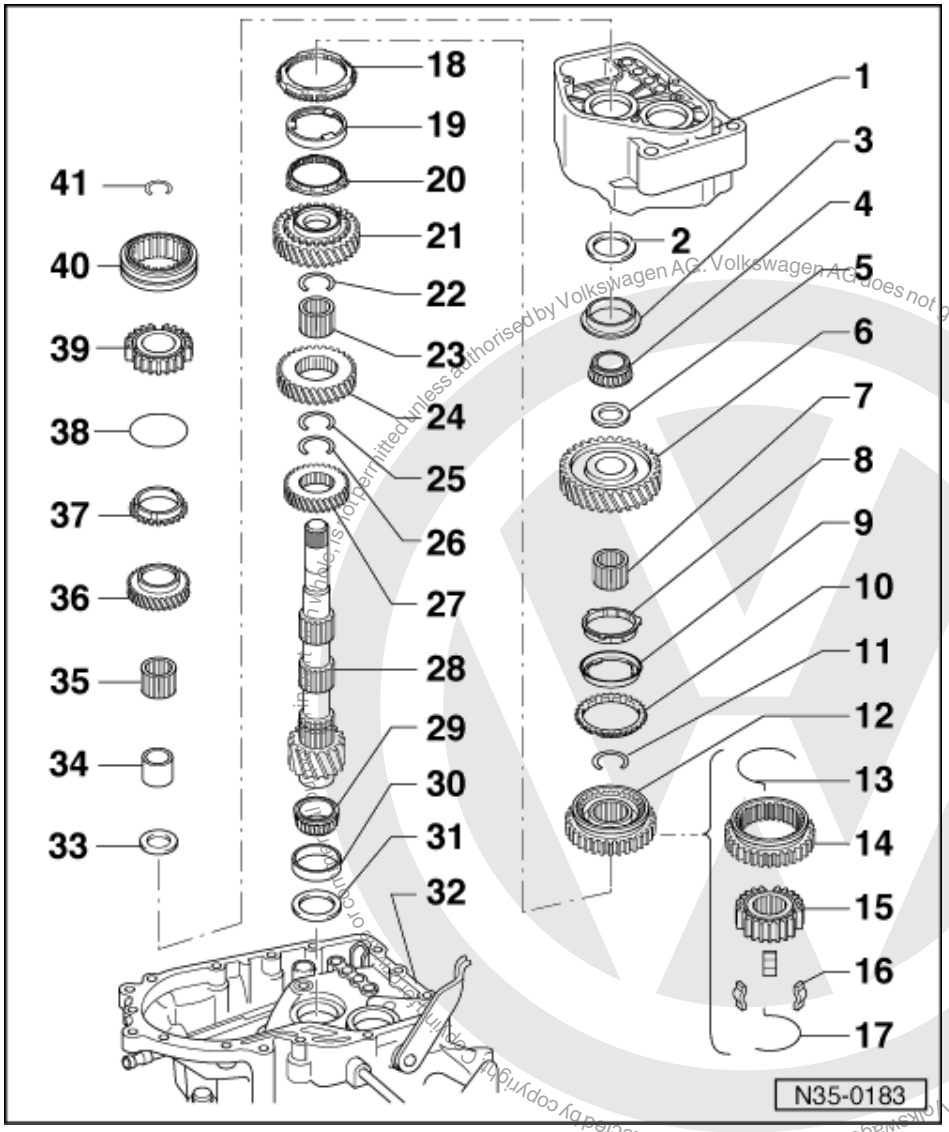

Notes:

- When installing new gears or a new output shaft consult technical data =>Page 2 .
- If the output shaft or taper roller bearings have been renewed then carry out output shaft adjustment => Page 122 .

1 Gearbox housing
- As of gearbox build date 08 07 7 the bearing seat for the taper roller bearing outer race is approx. 1 mm deeper due to the new washer (item 2).

2 Washer
- Always 1 mm thick
- Installed as of gearbox build date 08 07 7

satelettronica

Protected by copyright. Copying for private or commercial purposes, in part or in whole, is not permitted unless authorised by Volkswagen AG. Volkswagen AG does not guarantee or accept any liability with respect to the correctness of information in this document. Copyright by Volkswagen AG.

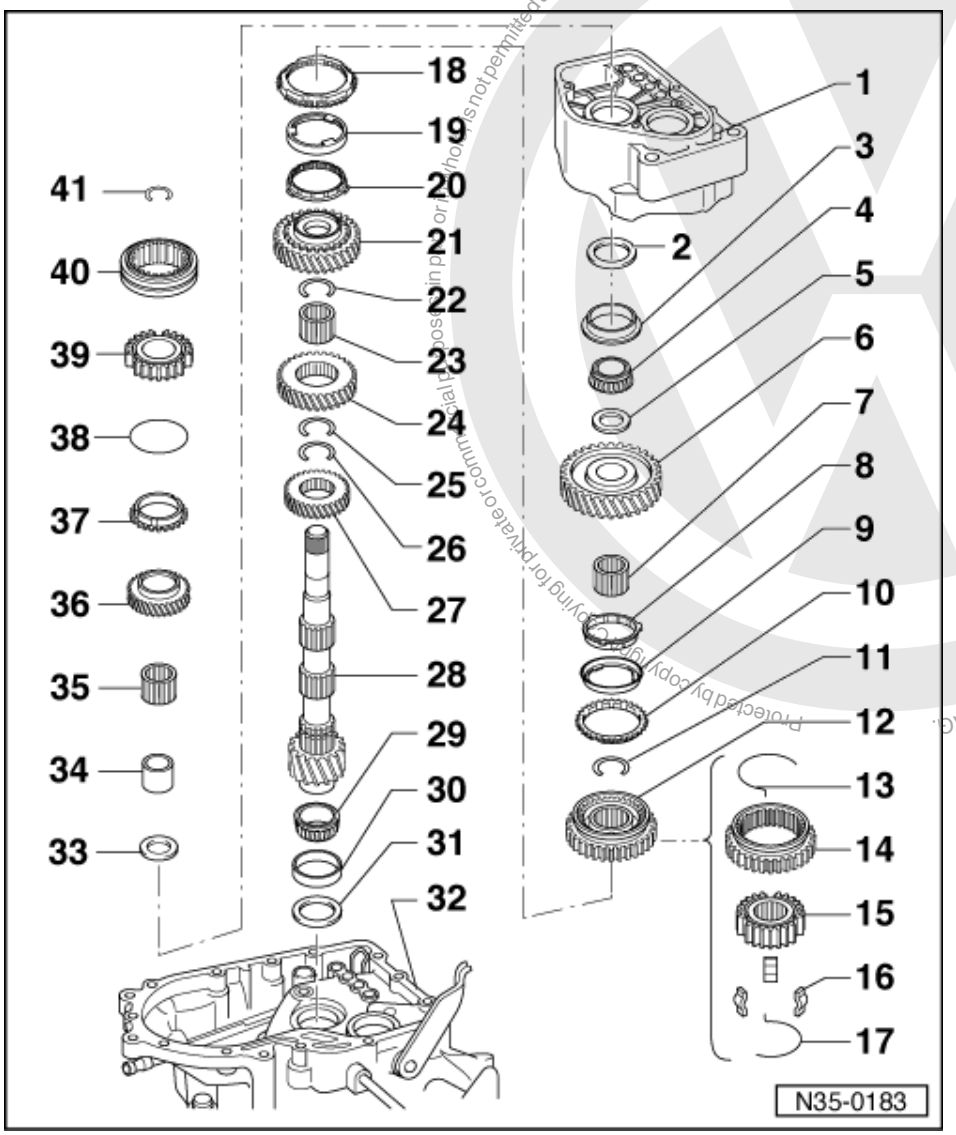

3 Outer race/taper roller bearing
- Pressing out => Fig. 1
- Pressing in => Fig. 2

4 Taper roller bearing inner race
- Pressing off with 1st selector gear => Fig. 3
- Pressing on => Fig.20

5 Thrust washer

6 1st selector gear
- Installation position => Fig. 19

7 Needle roller bearing
- For 1st gear

8 Synchro-ring
- (1st gear inner ring)
- Checking for wear => Fig. 11
- Check lugs for scoring
- Installation position => Fig. 18

satelettronica

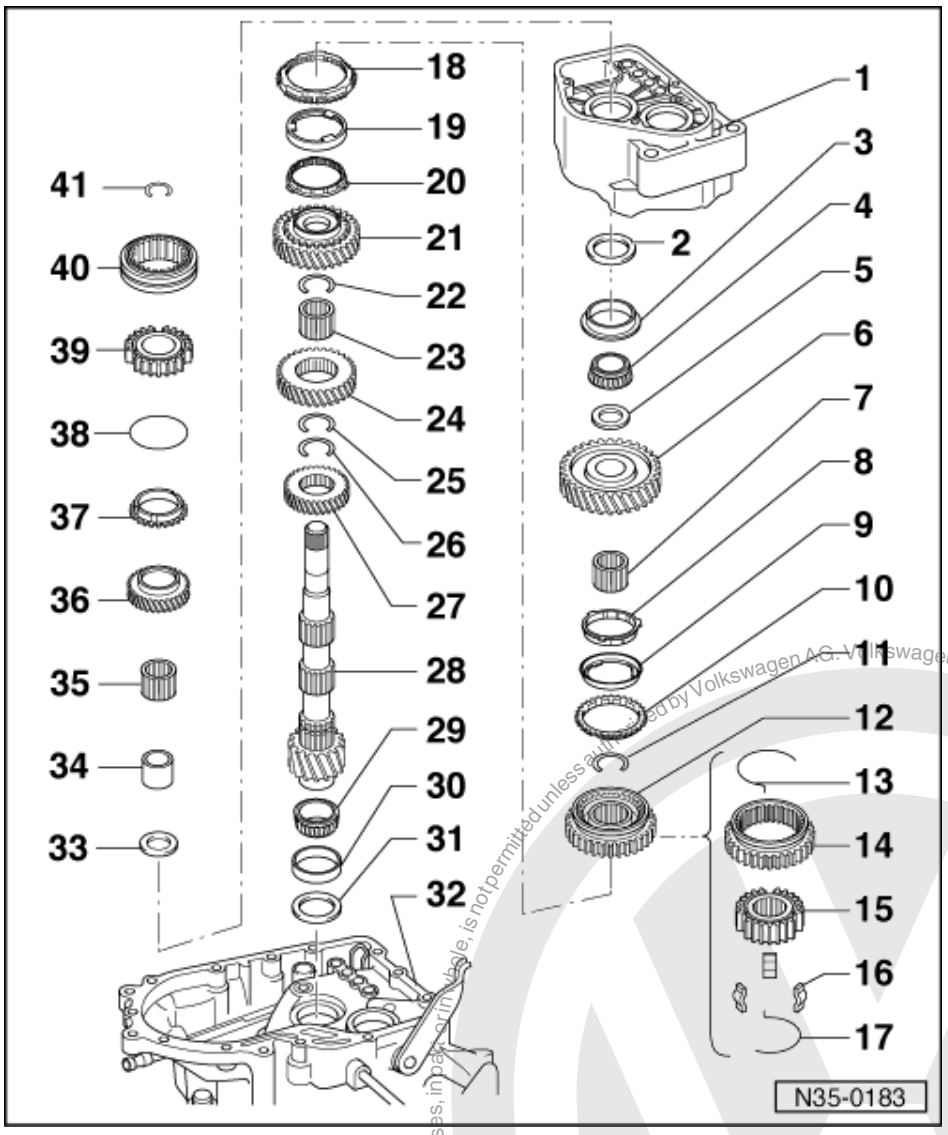

9 1st gear outer ring
- Insert in the synchro-ring (item 10), installation position => Fig. 17
- Renew if scored

10 1st gear synchro-ring
- Checking for wear
  => Fig. 12
- Assemble so that the recesses locate in the locking collar (item 12) locking pieces

11 Circlip
- Pushing out => Fig. 4
- Inserting => Fig. 10

12 1st and 2nd gear locking collar with synchro-hub
- Parts are paired
- Pressing off => Fig. 5
- Assembling locking collar/synchro-hub => Fig. 14 and Fig. 15
- Pressing on => Fig. 16

Protected by copyright. Copying for private or commercial purposes, in part or in whole, is not permitted unless authorised by Volkswagen AG. Volkswagen AG does not guarantee or accept any liability with respect to the correctness of information in this document. Copyright by Volkswagen AG.
satelettronica

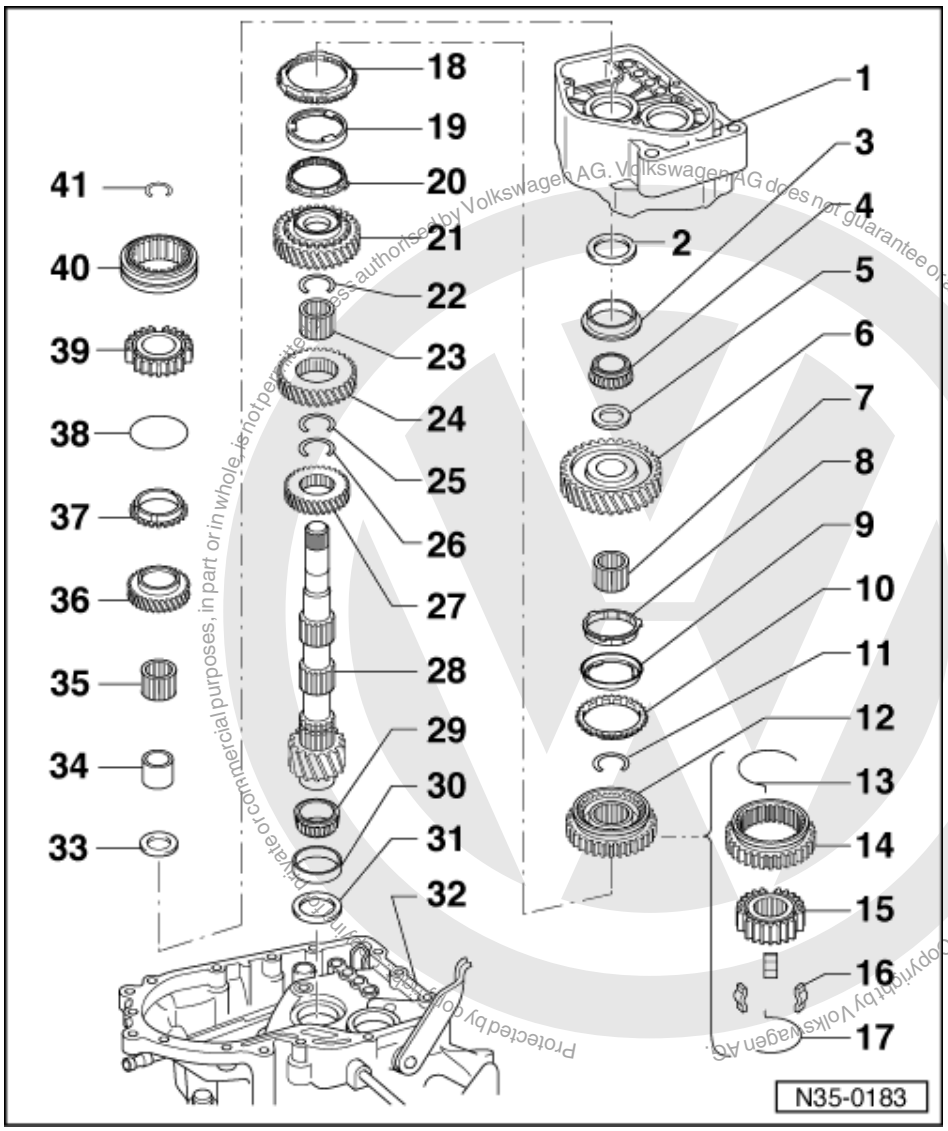

13 Spring
14 Locking collar
15 Synchro-hub
16 Locking pieces (Qty. 3)
17 Spring
18 2nd gear synchro-ring
- Checking for wear
  => Fig. 12
- Installation position => Fig. 13

19 2nd gear outer ring
- Insert in the synchro-ring (item 20)
- Installation position => Fig. 13
- Renew if scored

satelettronica

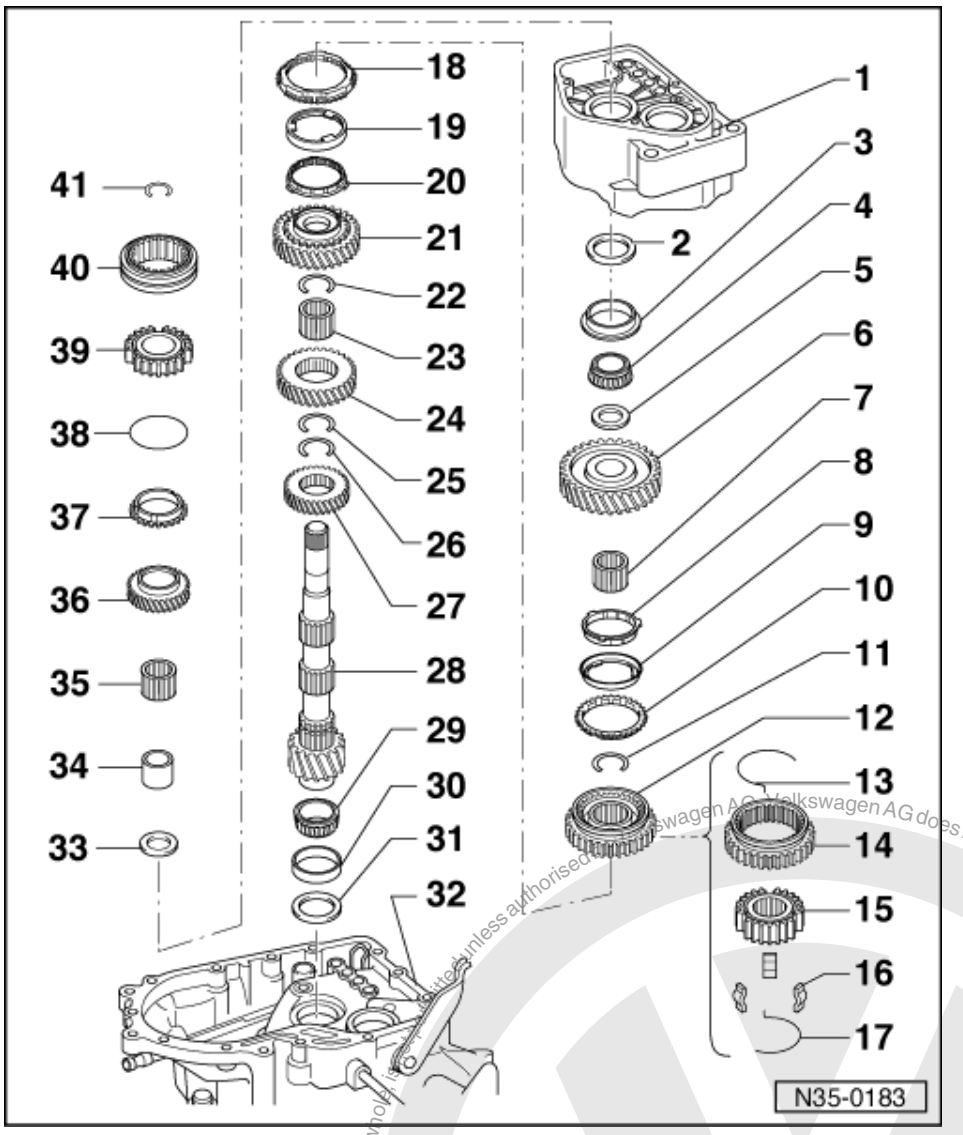

20 Synchro-ring
- (2nd gear inner ring)
- Checking for wear => Fig. 11
- Check lugs for scoring
- Installation position => Fig. 13

21 2nd gear

22 Circlip
- Pushing out => Fig. 4
- Inserting => Fig. 10

23 Needle roller bearing
- For 2nd gear

24 3rd gear

25 Circlip
- Pushing out => Fig. 4
- Inserting => Fig. 10

26 Circlip
- Pushing out => Fig. 4
- Inserting => Fig. 10

Protected by copyright. Copying for private or commercial purposes, in part or in whole, is not permitted unless authorised by Volkswagen AG. Volkswagen AG does not guarantee or accept any liability with respect to the correctness of information in this document. Copyright by Volkswagen AG.
satelettronica

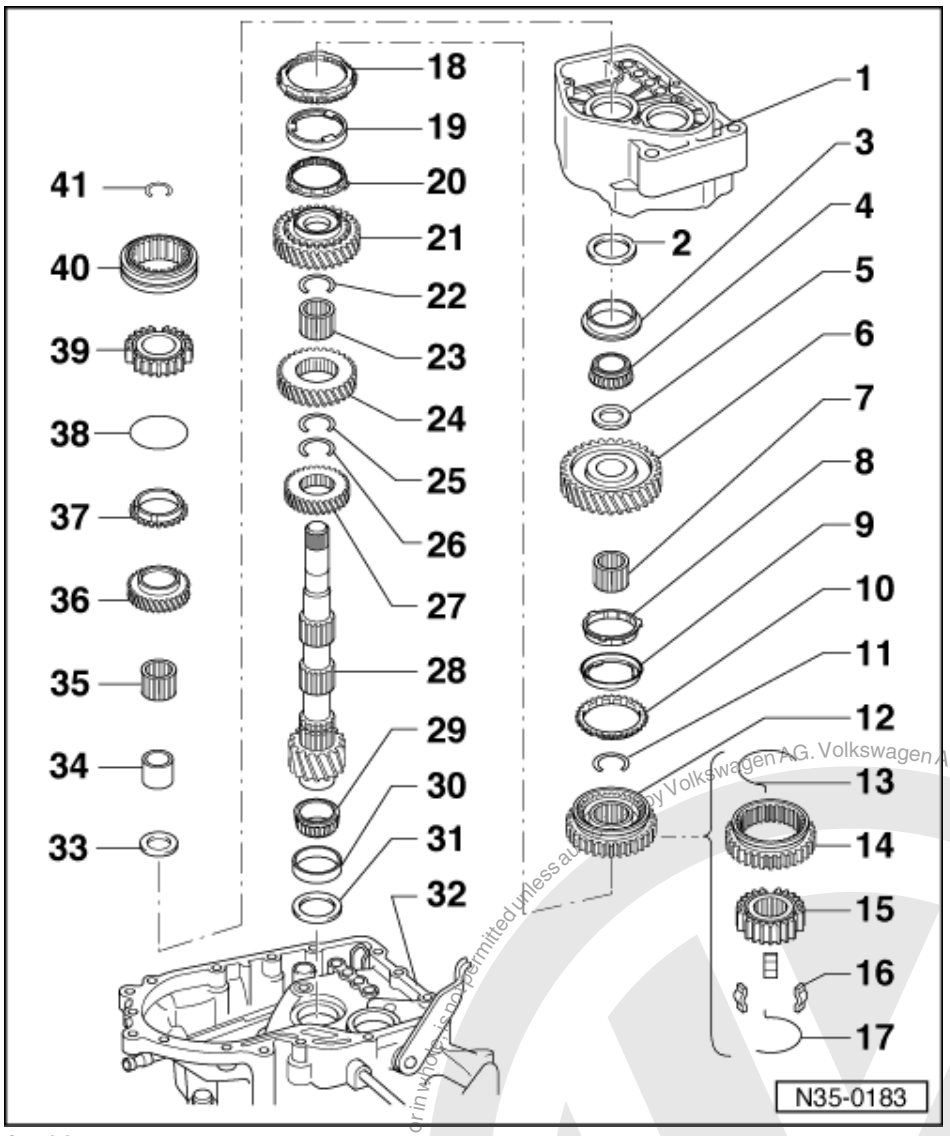

27 4th gear

- Marked groove points towards final drive teeth

28 Output shaft

- Ensure correct ratio (number of teeth) => Page 2 .
- Adjusting => Page 104

29 Taper roller bearing inner race

- Pulling off => Fig. 6
- Pressing on => Fig. 7

30 Outer race/taper roller bearing

- Pulling out => Fig. 8
- Pressing in => Fig. 9

31 Shim

- For output shaft
- Determining thickness => Page 122

32 Clutch housing

Protected by copyright. Copying for private or commercial purposes, in part or in whole, is not permitted unless authorised by Volkswagen AG. Volkswagen AG does not guarantee or accept any liability with respect to the correctness of information in this document. Copyright by Volkswagen AG.
satelettronica

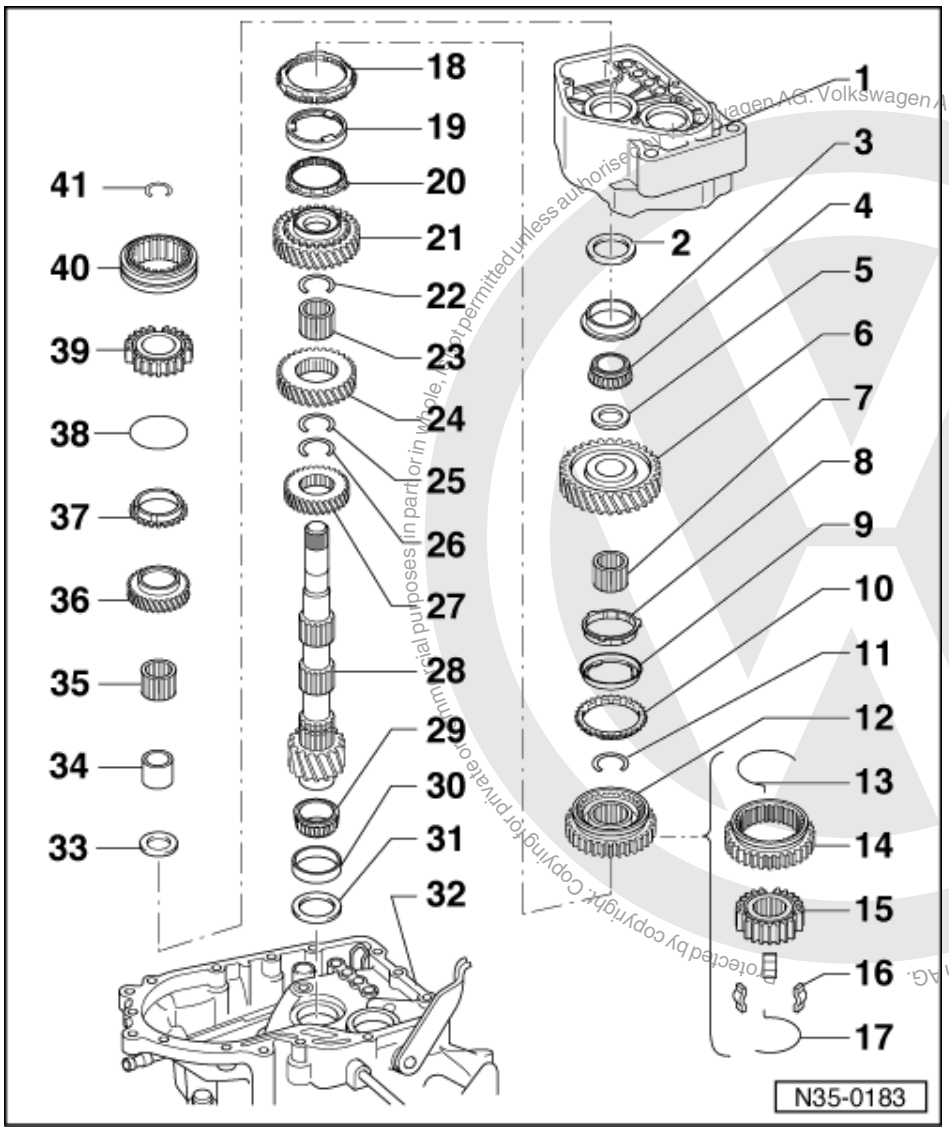

33 Thrust washer
- Shoulder on thrust washer faces taper roller bearing

34 Sleeve for needle roller bearing
- Pulling off and pressing on => from Page 70

35 5th selector gear needle roller bearing

36 Selector gear for 5th gear

37 5th gear synchro-ring

38 Spring
- Insert onto 5th gear synchro-ring
- Renew when worn

39 5th gear synchro-hub
- Removing => from Page 70

satelettronica

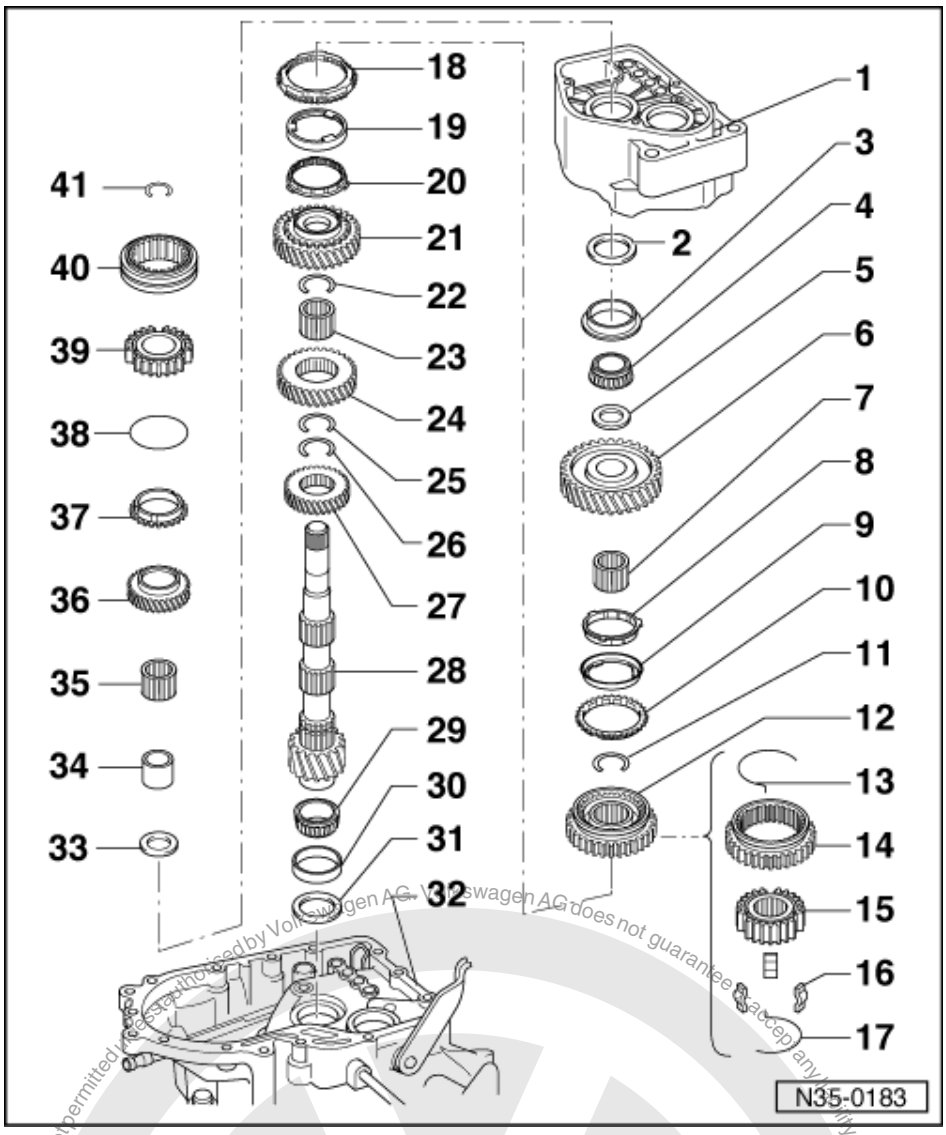

40 5th gear locking collar

- Removing => from Page 70

41 Circlip

- Always renew
- Determining thickness => Page 82

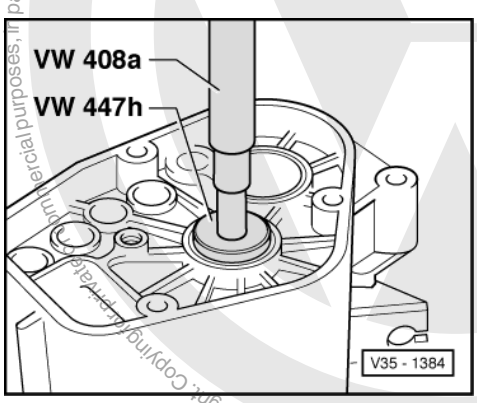

satelettronica

-> Fig.1 Pressing out taper roller bearing outer race

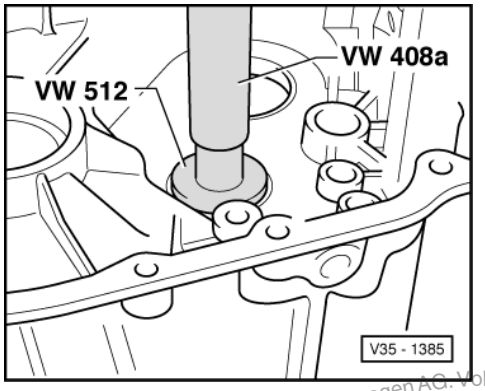

-> Fig.2 Pressing in taper roller bearing outer race

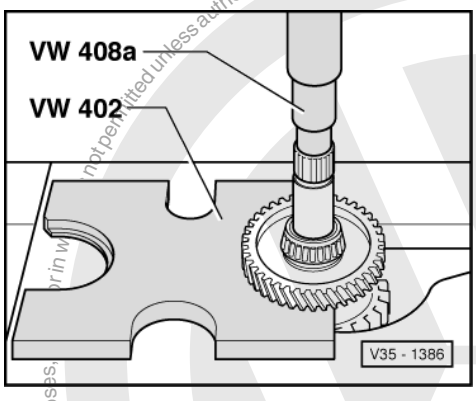

-> Fig.3 Pressing off 1st gear sliding wheel with taper roller bearing inner race.

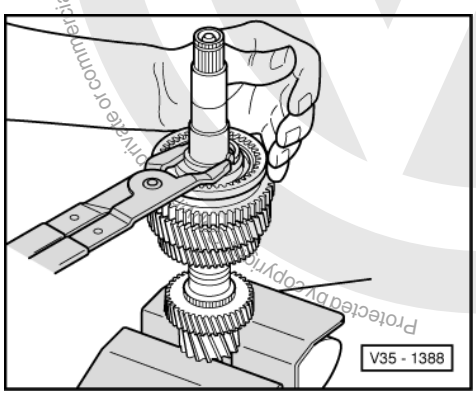

-> Fig.4 Pushing circlip out of groove

Warning!
Prevent uncontrolled springing of circlip. Danger of accident!

Protected by copyright. Copyright by Volkswagen AG. Volkswagen AG does not guarantee or accept any liability with respect to the correctness of information in this document. Copyright by Volkswagen AG. Private or commercial purposes, or in whole or in part is not permitted unless authorised by Volkswagen AG.
satelettronica

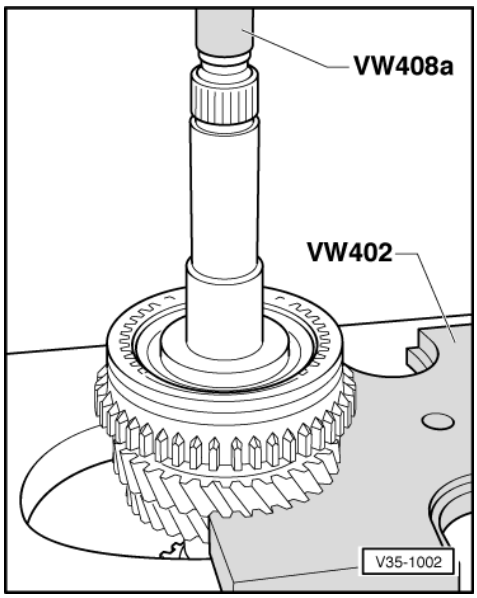

-> Fig.5 Pressing off 1st and 2nd gear locking collar and synchro-hub

After removing securing ring press 2nd selector gear and locking collar/synchro-hub off together.

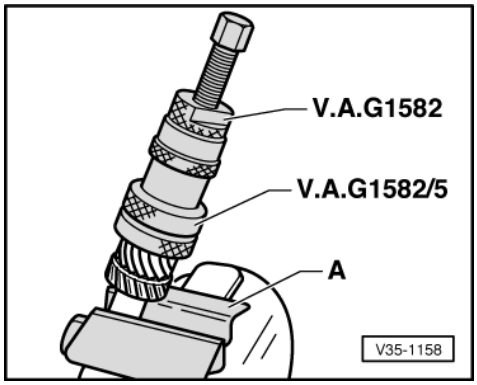

-> Fig.6 Pulling off small taper roller bearing inner race

A - Vice clamps/vice

- Fit gripping device and tension behind bearing rollers, then turn bearing and retension gripping device.

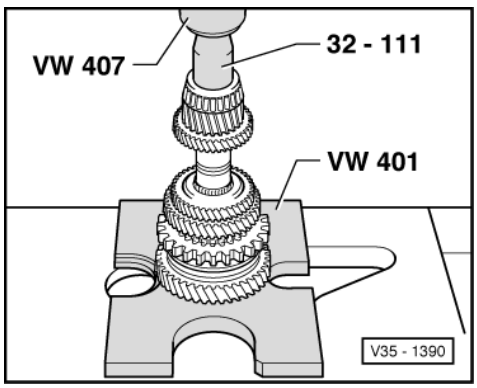

Protected by copyright. Copying for private or commercial purposes, in part or in whole, is not permitted unless authorised by Volkswagen AG. Volkswagen AG does not guarantee or accept any liability with respect to the correctness of information in this document. Copyright by Volkswagen AG.
satelettronica

-> Fig.7 Pressing on taper roller bearing inner race

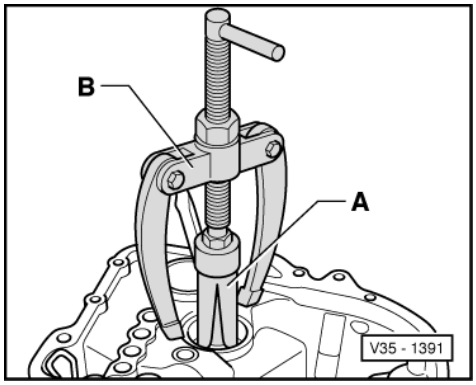

-> Fig.8 Pulling taper roller bearing outer race out of clutch housing

A - Internal extractor, e.g. Kukko 21/6, 37 ... 46 mm
B - Counter support, e.g. Kukko 22/2

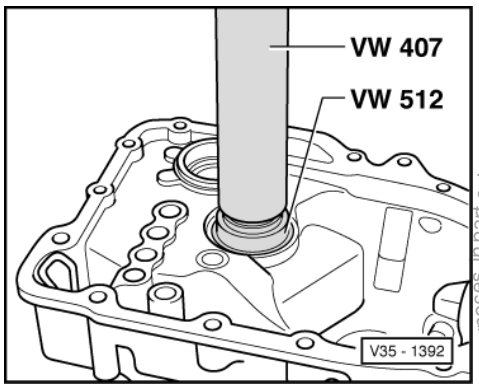

-> Fig.9 Pressing in taper roller bearing outer race

Protected by copyright. Copying for private or commercial purposes, in part or in whole, is not permitted unless authorised by Volkswagen AG. Volkswagen AG does not guarantee or accept any liability with respect to the correctness of information in this document. Copyright by Volkswagen AG.
satelettronica

-> Fig.10 Inserting circlip

-> Fig.11 Checking 1st and 2nd gear inner-ring for wear

- Press inner ring onto 2nd selector gear cone and measure gap "a" with a feeler gauge.

Gap "a"	New dimension	Wear limit
1st and 2nd gear	0.75 ... 1.25 mm	0.3 mm

Protected by copyright. Copying for private or commercial purposes, in part or in whole, is not permitted unless authorised by Volkswagen AG. Volkswagen AG does not guarantee or accept any liability with respect to the correctness of information in this document. Copyright by Volkswagen AG.

satelettronica

-> Fig.12 Checking 1st and 2nd gear synchro-ring for wear

- Press synchro-ring, outer-ring and inner-ring onto selector gear cone and measure gap "a" with feeler gauge.

Gap "a"	New dimension	Wear limit
1st and 2nd gear	1.2 ... 1.8 mm	0.5 mm

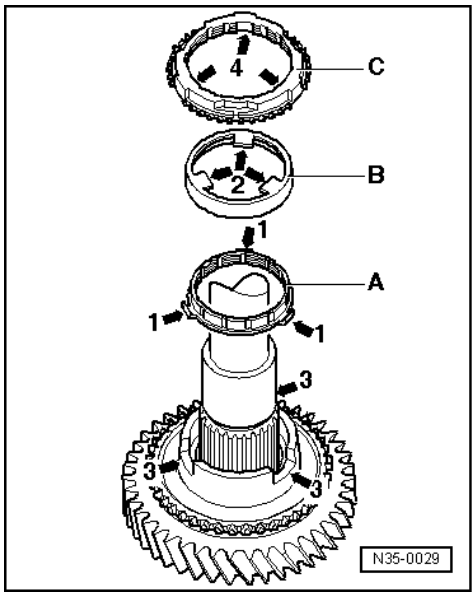

-> Fig.13 Installation position of outer-ring, inner ring and 2nd gear synchro-ring

- Place inner ring -A- on 2nd selector gear.

The angled lugs (arrow 1) point towards outer ring -B-.

- Fit outer ring -B-.

The lugs (arrow 2) engage in the selector gear recesses (arrow 3).

- Fit synchro-ring -C-.

The grooves (arrow 4) engage in the inner ring -A- lugs (arrow 1).

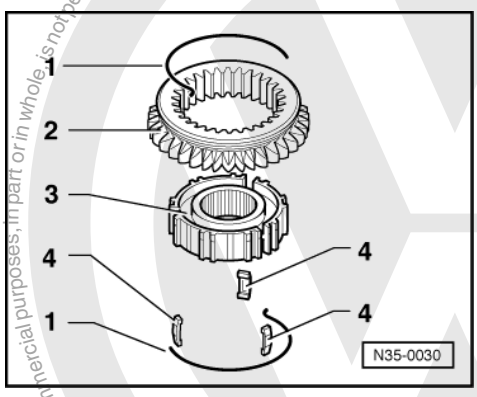

-> Fig.14 Dismantling and assembling 1st and 2nd gear synchro-hub and locking collar

1 - Spring
2 - Locking collar
3 - Synchro-hub

Protected by copyright. Copying for private or commercial purposes, in part or in whole, is not permitted unless authorised by Volkswagen AG. Volkswagen AG does not guarantee or accept any liability with respect to the correctness of information in this document. Copyright by Volkswagen AG.
satelettronica

4 - Locking piece

- Slide locking collar over synchro-hub.

The small recesses for locking pieces in synchro-hub and locking collar must align with one another.

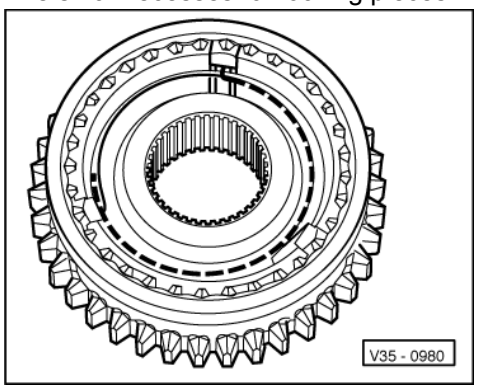

-> Fig.15 Assembling 1st and 2nd gear locking collar/synchro-hub

The locking collar has been pushed over the synchro-hub.

- Insert locking pieces into small recesses and install springs 120° off-set. The angled end of the spring must locate in the hollow locking piece.

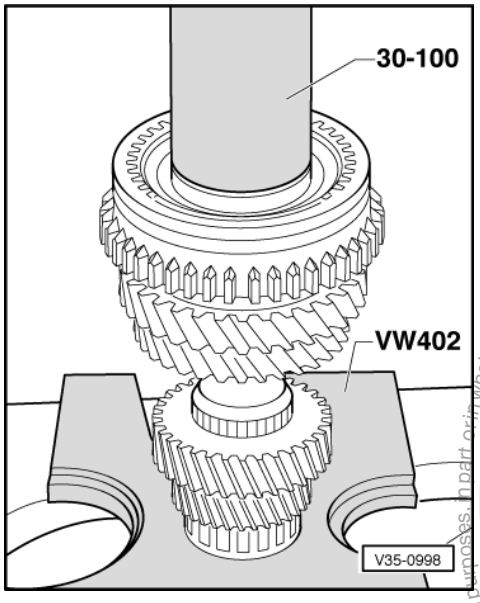

-> Fig.16 Pressing on locking collar/synchro-hub

Installation position:

Locking collar groove for selector fork towards 1st gear, the teeth for reverse gear towards 2nd gear.

Turn synchro ring so that the grooves align with the locking pieces.

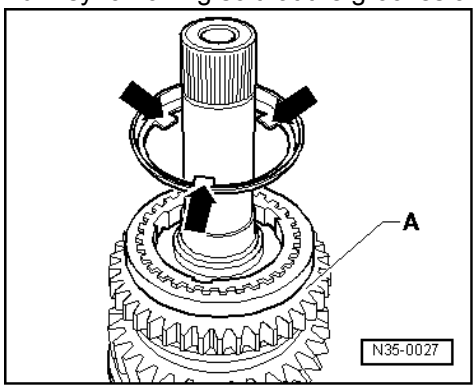

Protected by copyright. Copying for private or commercial purposes, in part or in whole, is not permitted unless authorised by Volkswagen AG. Volkswagen AG does not guarantee or accept any liability with respect to the correctness of information in this document. Copyright by Volkswagen AG.
satelettronica

-> Fig.17 Installation position for 1st gear outer-ring

The lugs (arrows) face towards reverse gear -A-.

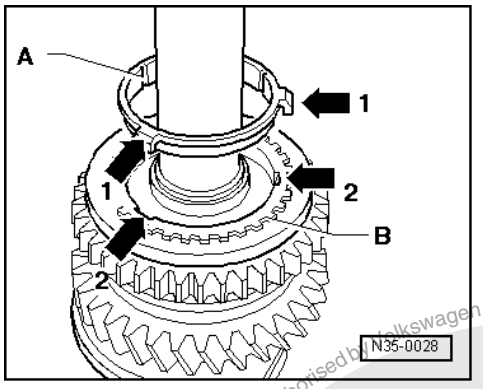

-> Fig.18 Installation position synchro-ring -A- 1st gear (inner ring)

The lugs (arrow 1) locate in the recesses (arrow 2) in the synchro-ring -B-.

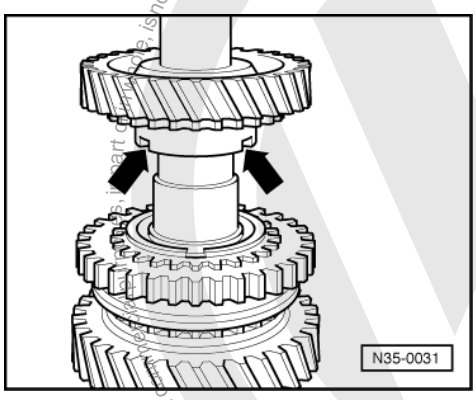

-> Fig.19 Installation position 1st selector gear

The recesses in the shoulder (arrows) locate in the lugs of the outer-ring (arrows => Fig. 17)

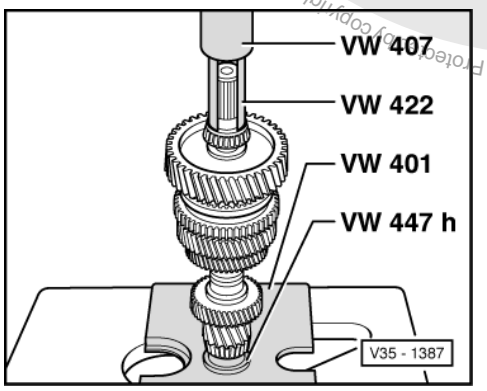

Protected by copyright. Copying for private or commercial purposes, in part or in whole, is not permitted unless authorised by Volkswagen AG. Volkswagen AG does not guarantee or accept any liability with respect to the correctness of information in this document. Copyright by Volkswagen AG.
satelettronica

-> Fig.20 Pressing on taper roller bearing inner race

4 - Adjusting output shaft

4.1 - Adjusting output shaft

(Determining thickness of output shaft shim)

It is necessary to readjust the output shaft when

- Gearbox housing
- Clutch housing
- Output shaft

or

- Taper roller bearing

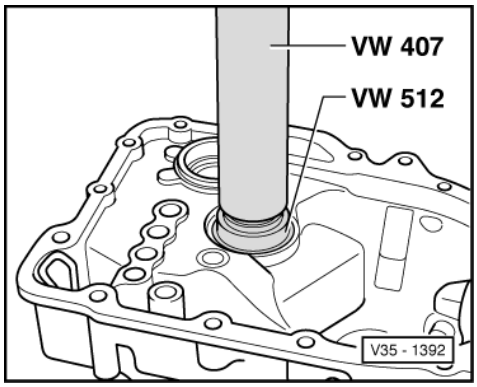

have been changed.

Adjustment overview => Page 139

- -> Press small taper roller bearing outer race together with a 0.75 mm thick shim fully into clutch housing.
- Insert output shaft into clutch housing and assemble gearbox housing. Tighten hexagon bolts to 25 Nm.

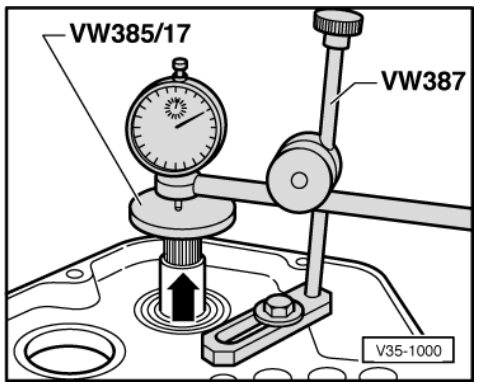

- -> Fit measuring appliance and D.T.I. (3 mm measuring range).
- Before taking any measurements rotate output shaft to allow bearing to settle. Set D.T.I. to "O" with 1 mm preload.

Protected by copyright. Copying for private or commercial purposes, in part or in whole, is not permitted unless authorised by Volkswagen AG. Volkswagen AG does not guarantee or accept any liability with respect to the correctness of information in this document. Copyright by Volkswagen AG.
satelettronica

Note:

This preparation is to be repeated for each subsequent measurement, otherwise the gauge will not return to the starting position.

- Pull output shaft in direction of arrow. Read off and note play indicated on D.T.I. (example: 0.30 mm).

Determining thickness of shim

The specified bearing preload is obtained by adding to the reading obtained
(0.30 mm) and the thickness of the shim installed
(0.75 mm) a preload constant of
(0.20 mm).

Example:

Shim installed	0.75 mm
+ Reading	0.30 mm
+ Preload (constant)	0.20 mm
Thickness of shim	1.25 mm

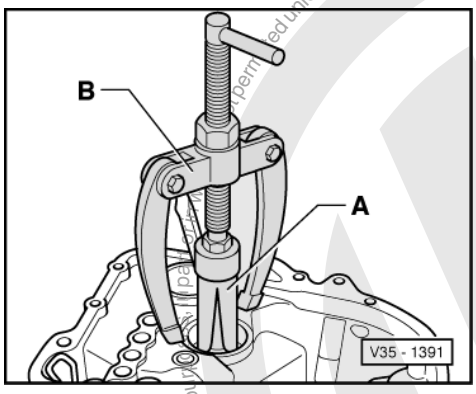

- -> Remove output shaft and pull out small taper roller bearing outer race out of clutch housing.
- Remove inserted shim (0.75 mm thick) from clutch housing.

The following adjustment shims are available:

Size (mm)	Part No.
0.70	020 311 391 Q
0.75	020 311 391
0.80	020 311 391 A
0.85	020 311 391 B
0.90	020 311 391 C
0.95	020 311 391 D
1.00	020 311 391 E
1.05	020 311 391 F
1.10	020 311 391 G
1.15	020 311 391 H
1.20	020 311 391 J
1.25	020 311 391 K
1.30	020 311 391 L
1.35	020 311 391 M
1.40	020 311 391 N

If the size of shim required is larger than that listed in the table, insert two shims totalling the correct figure.

- Press in small taper roller bearing outer race together with the determined shim (in example 1.25 mm) and install output shaft.

For educational purposes only. Copying for private or commercial purposes, in part or in whole, is not permitted unless authorised by Volkswagen AG. Volkswagen AG does not guarantee or accept any liability with respect to the correctness of information in this document. Copyright by Volkswagen AG.
satelettronica

- Fit gearbox housing on and tighten hexagon bolts to 25 Nm.

Checking friction moment

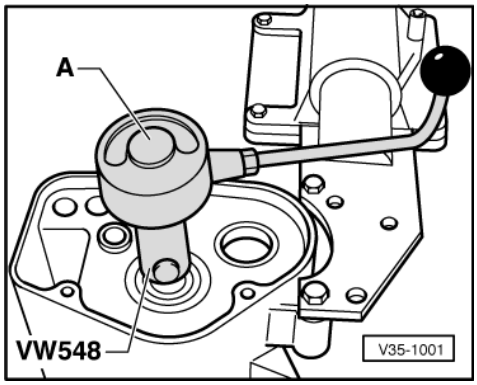

-> A - Commercially available torque gauge 0 ... 600 Ncm

- Clamp clamping piece VW 548. A metal plate (or adhesive tape) must be wrapped around the output shaft to enable the clamp piece VW 548 to be clamped to the output shaft.

For new taper roller bearings the friction moment must be 80 ... 160 Ncm.

For used taper roller bearings the friction torque must be at least 30 Ncm.

Note:

Lubricate bearings with gearbox oil before checking friction moment.

Protected by copyright. Copyright by Volkswagen AG.
Copyright © Volkswagen AG does not guarantee or accept any liability with respect to the correctness of information in this document.
Copying for private or commercial purposes, in part or in whole, is not permitted unless authorised by Volkswagen AG.
satelettronica

39 - Final drive, Differential rear

1 - Renewing selector shaft seal with gearbox in situ

1.1 - Renewing selector shaft seal with gearbox in situ

- Observe general repair instructions
  => Page 12 .

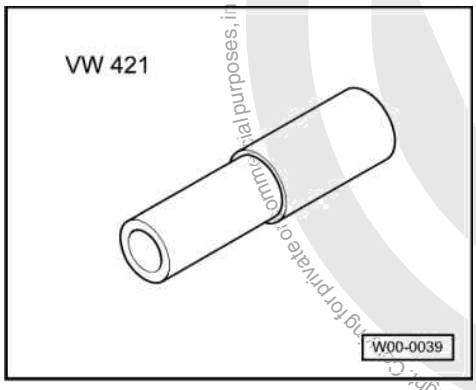

Special tools, workshop equipment, testers, measuring instruments and auxiliary items required

- VW 421 Tube

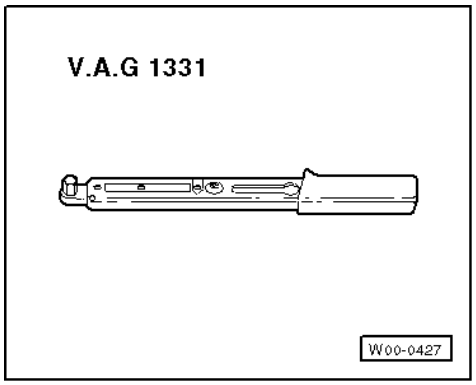

- V.A.G 1331 Torque wrench

Removing

- Drain gear oil.
- Remove selector finger => from page 40
- Remove selector shaft.
- To prevent damage to the selector shaft, wrap thin layer of insulation tape around it.
- Push selector shaft in onto stop.

satelettronica

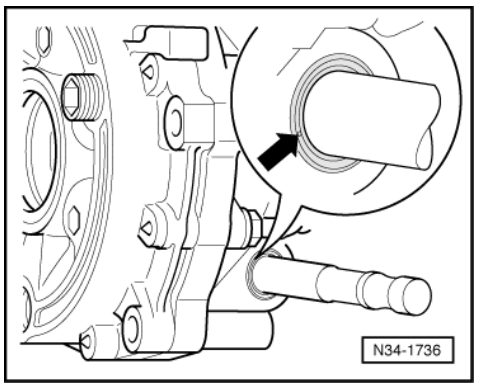

- -> Carefully punch a hole in the middle of the seal (arrow) using a small screwdriver.
- Then lever out the seal using a slightly larger screwdriver.
- Remove insulation tape and check selector shaft for damage.

Installing

- Lightly oil outer circumference of oil seal.
- Fill space between sealing lip and dust lip with grease G 052 128 A1.
- Carefully push seal over chamfer of selector shaft in a twisting motion.

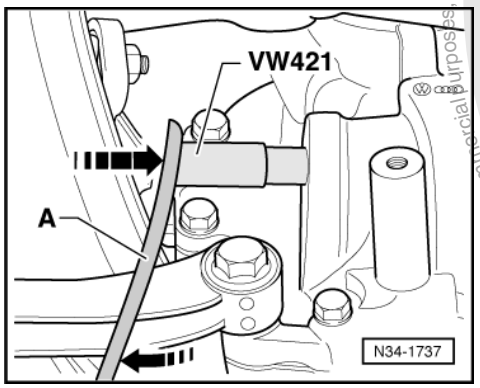

- -> Press in seal onto stop (in direction of arrow). When doing this, do not cant seal.
- If necessary use an assembly lever -A-. Use subframe as fulcrum point for lever.
- As subframes are not all uniform it may not be possible to use the tube VW 421 with gearbox in situ.
- If this is the case, use a commercially available socket AF 17 mm, length 83 mm.
- Assemble selector finger => page 49
- Replenish gear oil to lower edge of filler hole => page 63 .

Gear oil specification => Page 2

- Adjusting selector mechanism =>Page 49 .

2 - Removing and installing oil seals for flanged shafts

2.1 - Removing and installing oil seals for flanged shafts

(Gearbox installed)

satelettronica

2.2 - Renewing oil seals for flanged shafts with gearbox installed

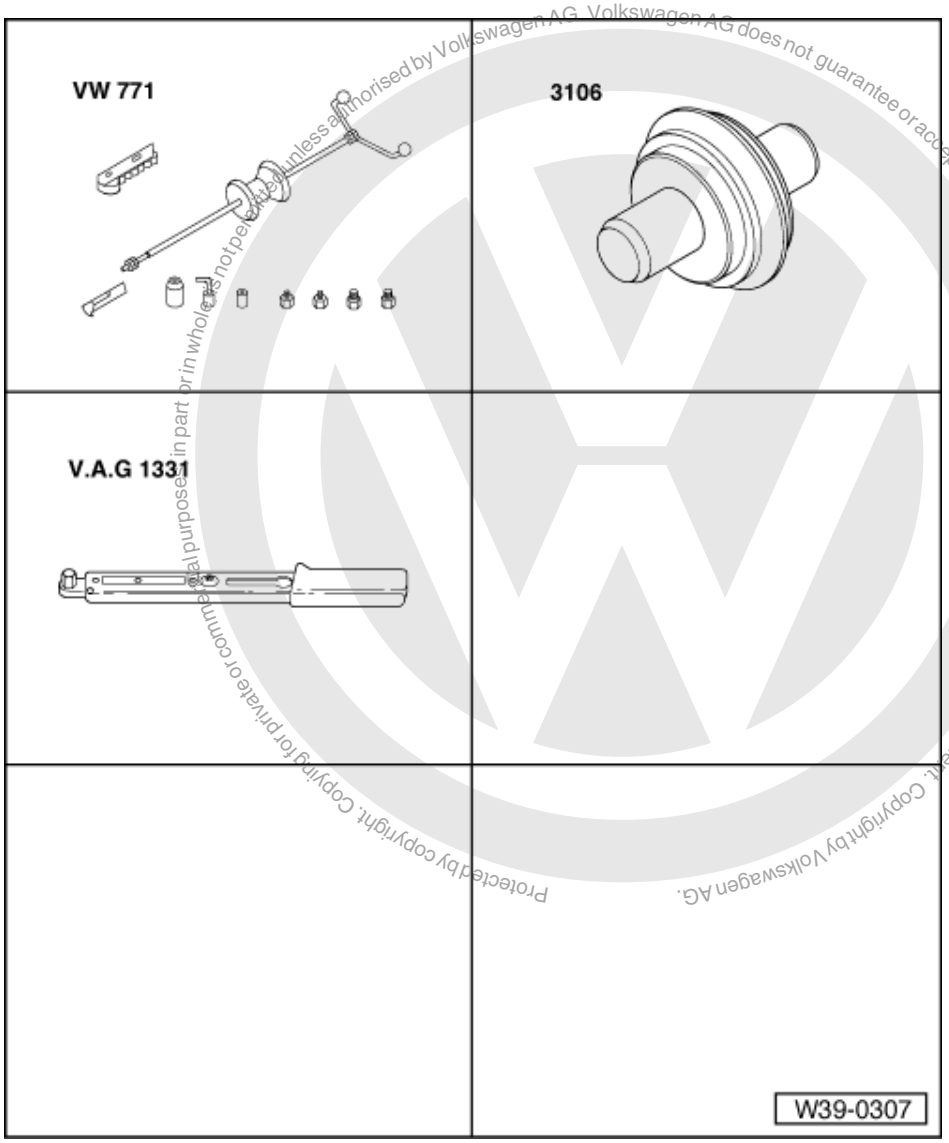

Volkswagen AG. Volkswagen AG does not guarantee or accept any liability with respect to the correctness of information in this document. Copyright by Volkswagen AG. Protected by copyright. Copying for private or commercial purposes, in part or in whole, is not permitted unless authorised by Volkswagen AG.

satelettronica

Special tools, workshop equipment, test and measuring appliances and auxiliary items required

- VW 771 Multi-purpose tool
- VW 771/37 Puller hooks
- 3106 Thrust piece
- V.A.G 1331 Torque wrench

- Observe general repair instructions
  => Page 12 .

Removing

- Disconnect drive shaft from flanged shaft.

Note:

Before disconnecting right-hand drive shaft, remove balance weight (mark installation position).

- Tie-up drive shaft as high as possible. Do not damage paint on drive shaft.

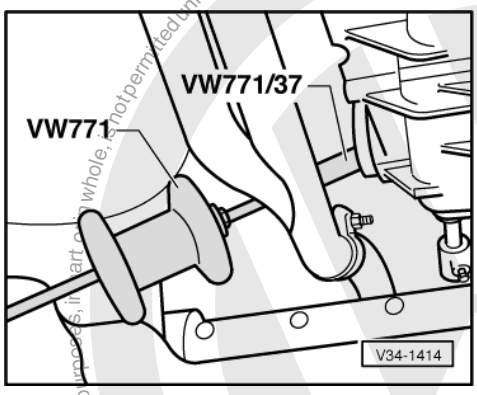

- Remove flanged shaft securing bolts, to do this screw two bolts into the flange and counter-hold flanged shaft using a lever.
- Place drip tray underneath.
- Remove flanged shaft.
- -> Pull seal out. Do not damage plate sleeve on right-hand side when doing this, otherwise leaks will occur.

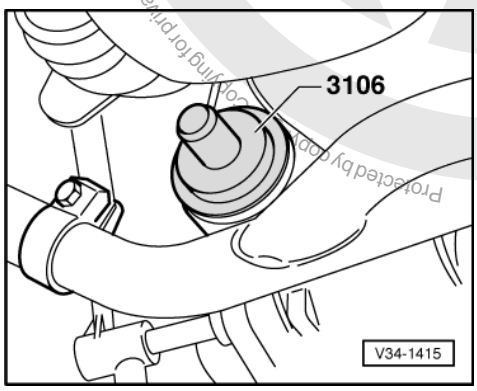

Installing

- -> Drive new seal in onto stop, when doing this do not cant seal.
- Fill space between sealing lip and dust lip with multi-purpose grease.
- Install flange shaft, tighten bolt to 25 Nm.

Note:

Left and right-hand flange shafts differ. Do not interchange.

- Install drive shaft, tighten bolts to 45 Nm.
- Check gearbox oil level and if necessary top up to lower edge of filler hole.

Gear oil specification => Page 2

Protected by copyright. Copying for private or commercial purposes, in part or on whole, is not permitted unless authorised by Volkswagen AG. Volkswagen AG does not guarantee or accept any liability with respect to the correctness of information in this document. Copyright by Volkswagen AG.
satelettronica

3 - Dismantling and assembling differential

3.1 - Dismantling and assembling differential

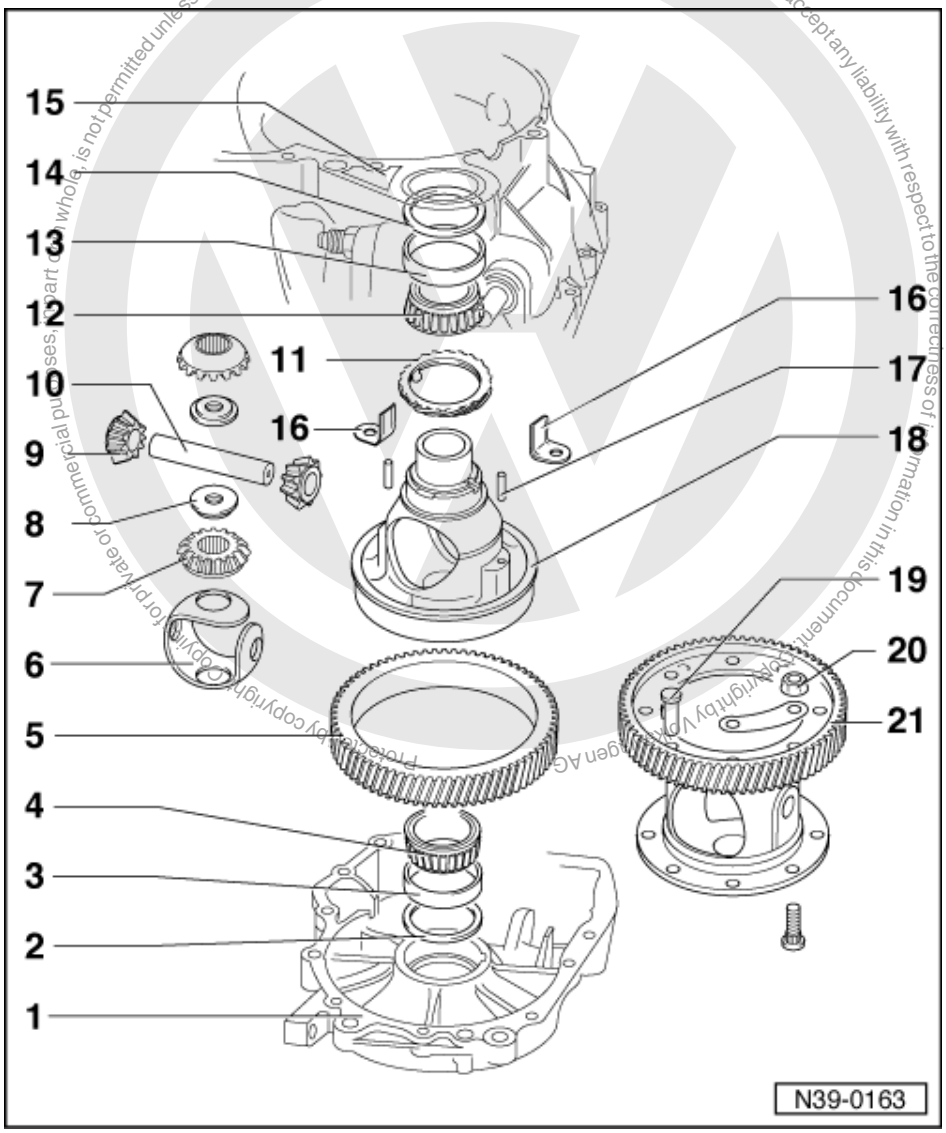

Notes:

- Heat taper roller bearing inner race to 100 °C before installing.
- Always renew both taper roller bearings together as a set.
- If taper roller bearings are renewed adjust differential => Page 139 .

1 Gearbox housing

2 Shim S1
- For differential
- Always 1 mm thick

3 Taper roller bearing outer race
- Pressing out => Fig. 1
- Pressing in => Fig. 2

4 Taper roller bearing inner race
- Pulling off => Fig. 3

satelettronica

- Pressing on => Fig. 4

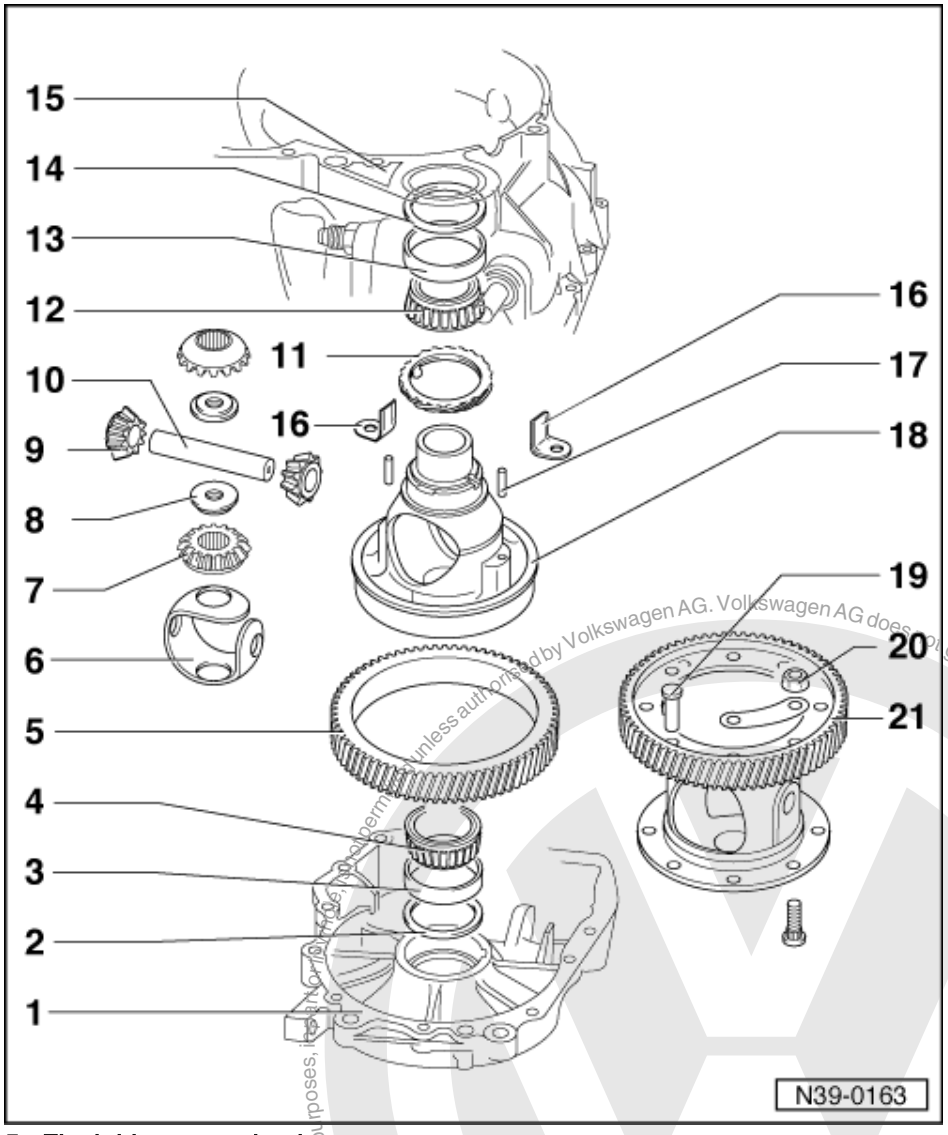

5 Final drive gear wheel
- Removing and installing => Page 136
- Ensure correct ratio (number of teeth) => Page 2

6 One-piece thrust washer
- Coat with gearbox oil when installing

7 Sun wheel
- Installing => Fig. 5

8 Threaded piece

9 Planet pinion
- Installing => Fig. 5

10 Planet pinion axis shaft
- Knock out with drift

11 Speedometer drive wheel
- Lever out with screwdriver

Protected by copyright. Copying for private or commercial purposes, in part or in whole, is not permitted unless authorised by Volkswagen AG. Volkswagen AG does not guarantee or accept any liability with respect to the correctness of information in this document. Copyright by Volkswagen AG.
satelettronica

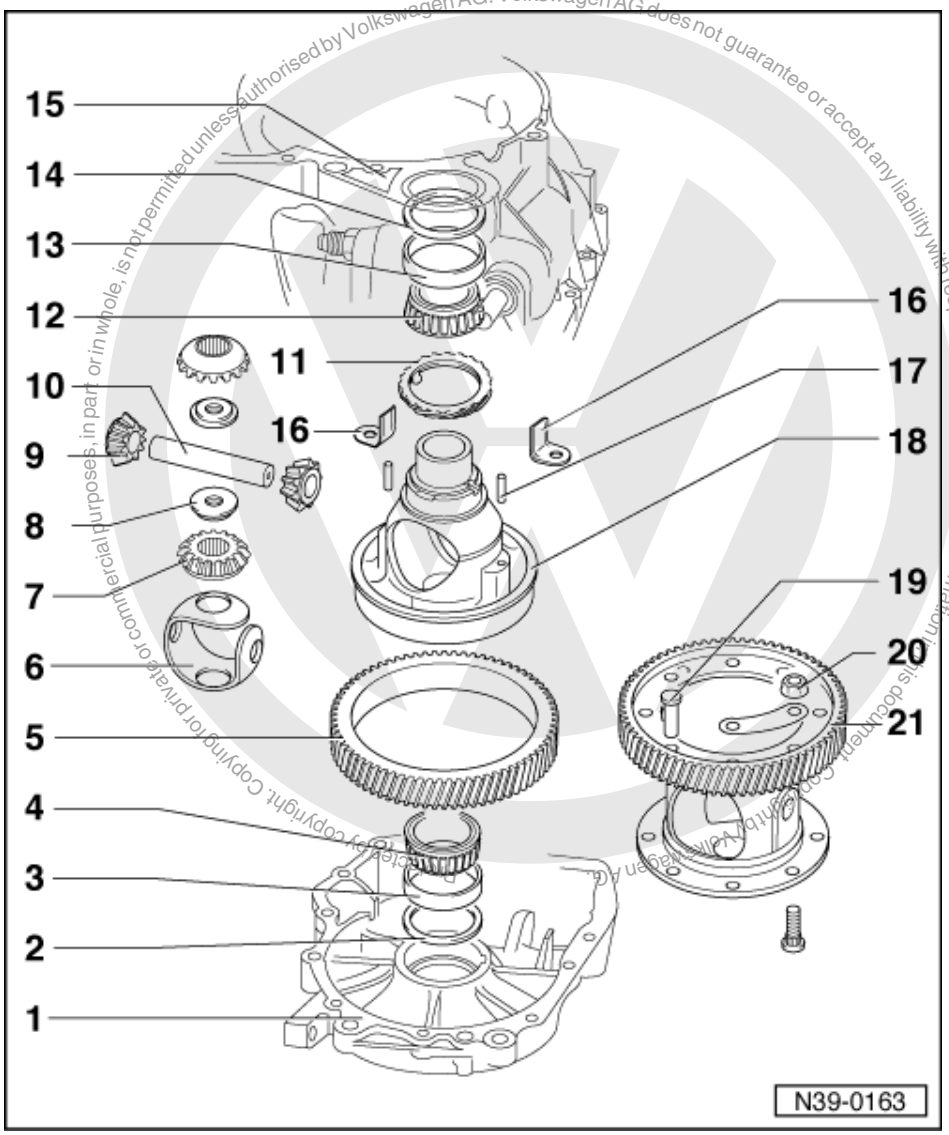

12 Taper roller bearing inner race

- Pulling off => Fig. 3
- Pressing on => Fig. 6

13 Taper roller bearing outer race

- Pressing out => Fig. 7
- Pressing in => Fig. 8

14 Shim S2

- For differential
- Determining thickness => Page 139

15 Clutch housing

16 Angle piece

- Secures planet pinion axis shaft on gearboxes where final drive gear wheel is rivetted
- Secured by rivets (Item 19)

satelettronica

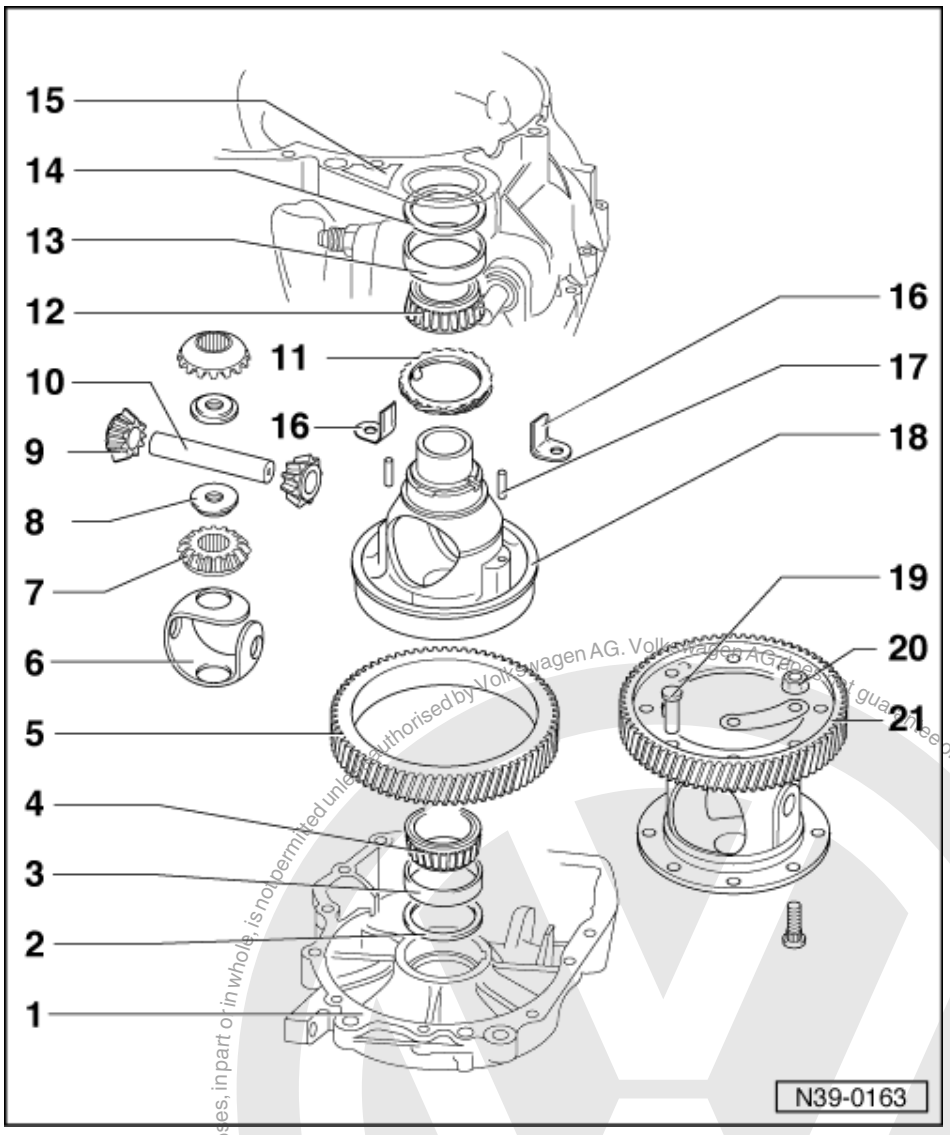

17 Spring pin
- For securing planet gear shaft on gearboxes with bonded crown wheel

18 Differential housing
- When renewing: Observe adjustment overview => Page 139

19 Rivet
- As produced
- Drilling out => Fig. 9
- Installing gear wheel with bolts => Fig. 10

20 Hexagon nut, 70 Nm

21 Final drive gear, rivetted or bolted
- Rivetted in production
- Bolted => Fig. 10

Protected by copyright. Copying for private or commercial purposes, in part or in whole, is not permitted unless authorised by Volkswagen AG. Volkswagen AG does not guarantee or accept any liability with respect to the correctness of information in this document. Copyright by Volkswagen AG.
satelettronica

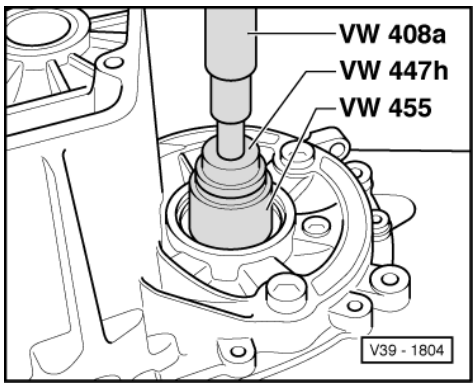

-> Fig.1 Pressing out taper roller bearing outer race

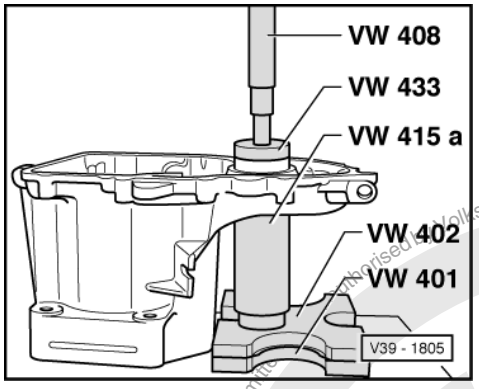

-> Fig.2 Pressing in taper roller bearing outer race

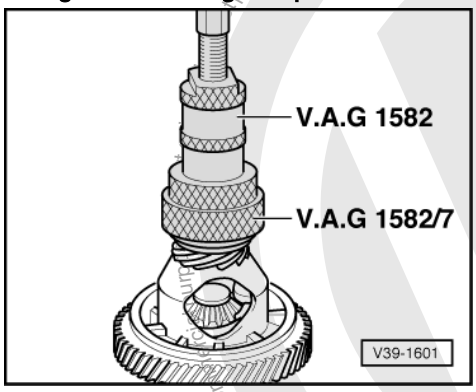

-> Fig.3 Pulling off taper roller bearing inner race

- Before fitting the extractor position press piece 30-11 on differential housing.

Note:

Both both taper roller bearing inner races are pulled off the differential housing in the same way.

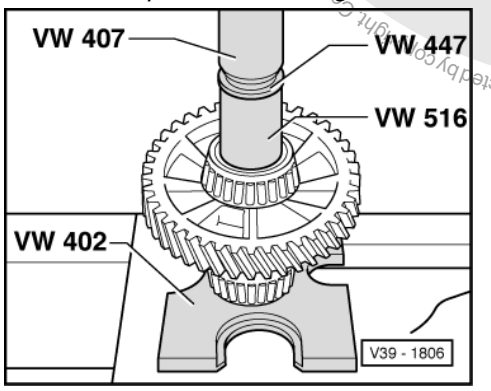

satelettronica
Protected by copyright. Copying for private or commercial purposes, in part or in whole, is not permitted unless authorised by Volkswagen AG. Volkswagen AG does not guarantee or accept any liability with respect to the correctness of information in this document. Copyright by Volkswagen AG.

-> Fig.4 Pressing on taper roller bearing inner race

- Heat inner ring before pressing on to approx. 100° C.

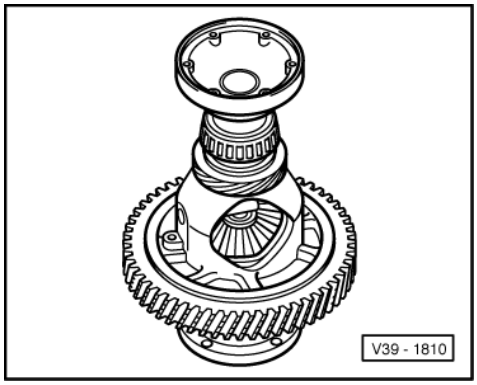

-> Fig.5 Installing differential bevel wheels

- Lubricate one piece thrust washer with gearbox oil and install.
- Install both sun wheels and secure (e.g. with flanged shaft).
- Insert a planet pinion and turned through 180°.
- Insert 2nd planet pinion exactly opposite first. Swing planet pinions into position. Push axis for planet pinions in up to 1st gear.
- Insert threaded pieces ensuring they are seated correctly.
- Drive planet pinion shaft into final position and secure.

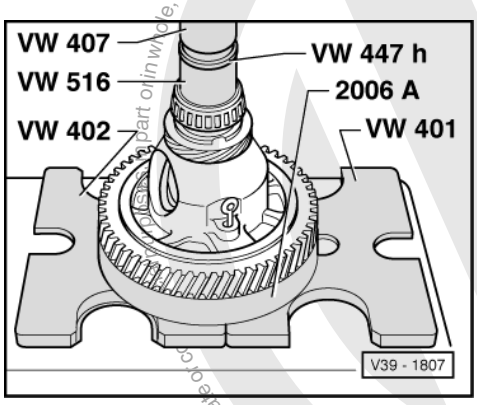

-> Fig.6 Pressing on taper roller bearing inner race

- Heat inner ring before pressing on to approx. 100°C.

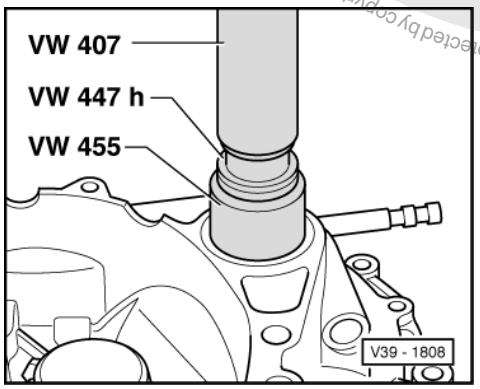

Protected by copyright. Copying for private or commercial purposes, in part or in whole, is not permitted unless authorised by Volkswagen AG. Volkswagen AG does not guarantee or accept any liability with respect to the correctness of information in this document. Copyright by Volkswagen AG.
satelettronica

-> Fig.7 Pressing out taper roller bearing outer race

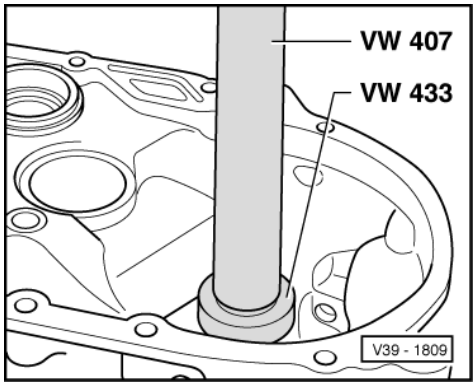

-> Fig.8 Pressing in taper roller bearing outer race

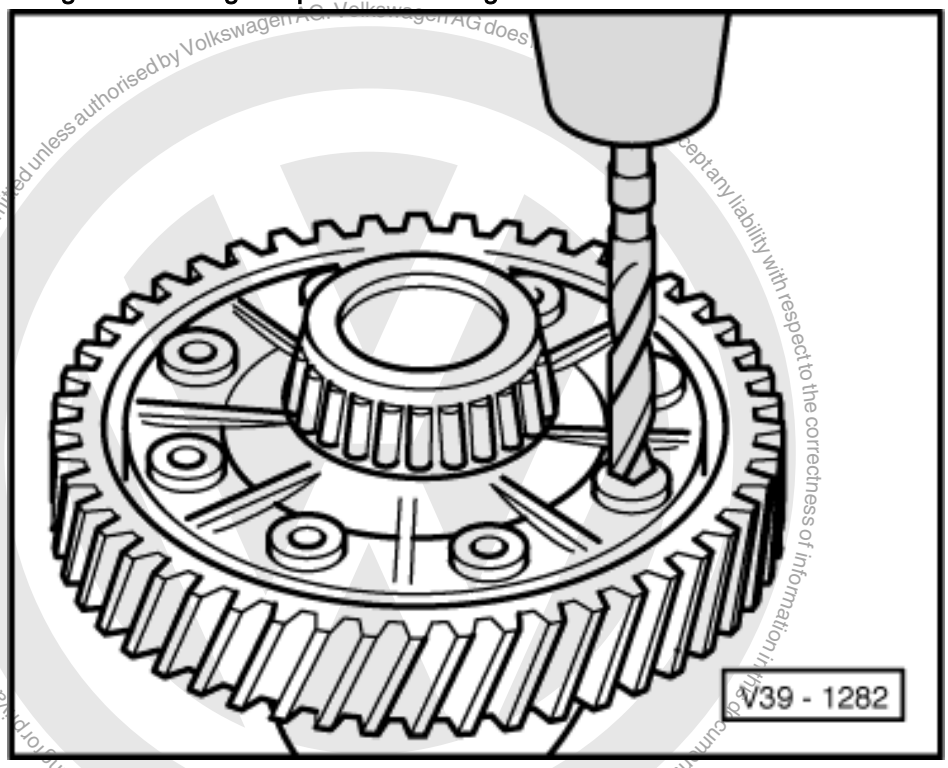

-> Fig.9 Drilling off rivet heads

- Drill out rivet heads with 12 mm drill from countersunk side and knock-out with drift.

Note:

Clean differential before and after drilling, protect taper roller bearing from drillings.

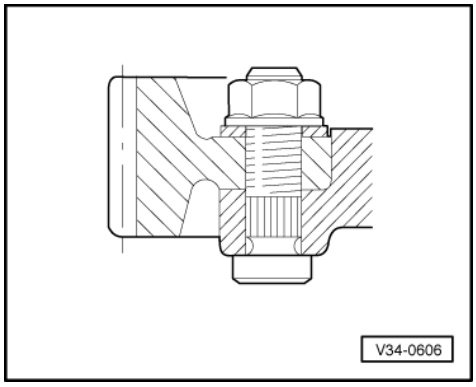

Protected by copyright. Copyright by Volkswagen AG.
Volkswagen AG does not accept any liability with respect to the correctness of information in this document. Copyright by Volkswagen AG. Protected by copyright. Copying for private or commercial purposes, in part or in whole, is not permitted unless authorised by Volkswagen AG.
satelettronica

-> Fig.10 Assemble gear wheel and differential housing using special bolts, plates and nuts

3.2 - Removing and installing final drive gear wheel

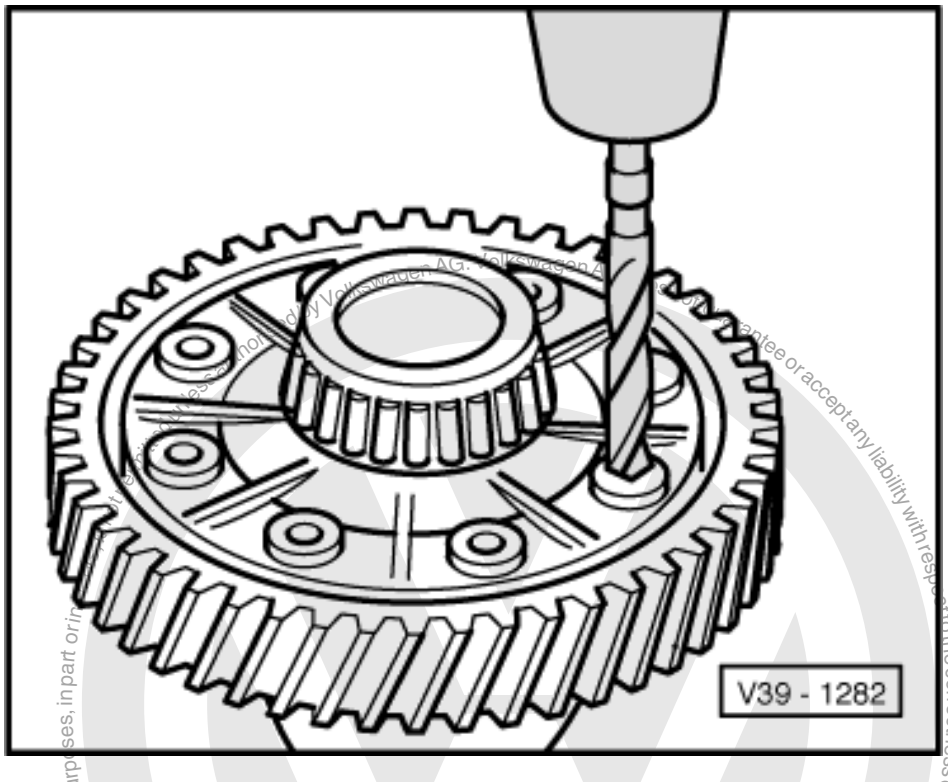

Removing

- -> Drill off rivet heads, if equipped, with 12 mm drill from depression side and drive out with drift.

Note:

Clean differential before and after drilling, protect taper roller bearing from drillings.

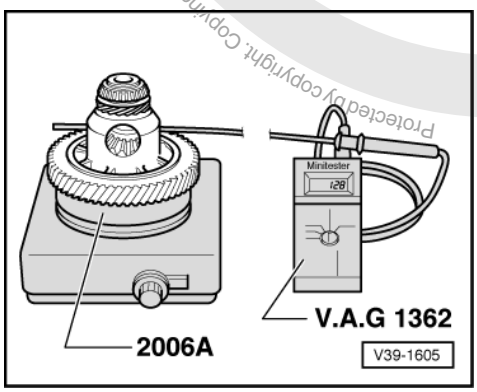

- -> Heat differential with gear wheel to 120 °C on a hot plate, thereby continually check the temperature of the gear wheel with Mini-tester V.A.G 1362. Place on ring 2006A so that the heat is directed directly into the gear wheel.

Protected by copyright. Copying for private or commercial purposes, in part or in whole, is not permitted unless authorised by Volkswagen AG. Volkswagen AG does not guarantee or accept any liability with respect to the correctness of information in this document. Copyright by Volkswagen AG.
satelettronica

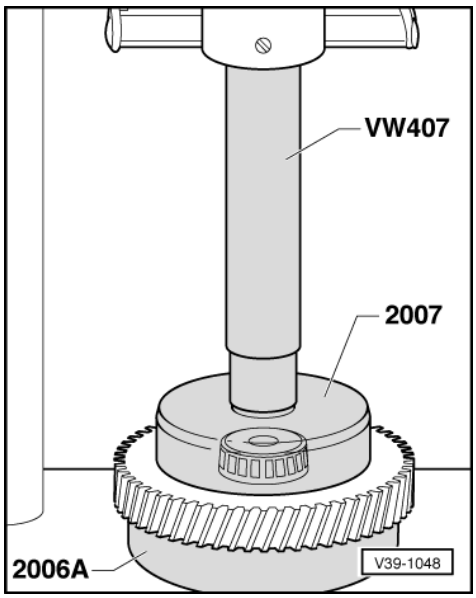

- -> Place ring 2006A on press table with chamfer on inner diameter towards table. Then place heated toothed wheel with differential on ring.
- Fit press piece 2007 and press toothed wheel off differential.

Installing

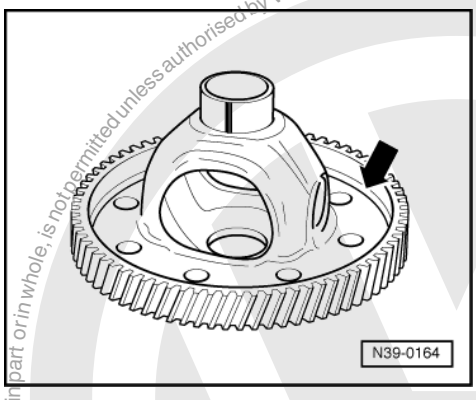

When renewing the final drive gear ensure correct ratio (number of teeth) => Page 2 .

Installation position:

- -> The circumferential groove (arrow) faces towards differential bevel gear mounting.

Gearboxes with bonded final drive gear wheel

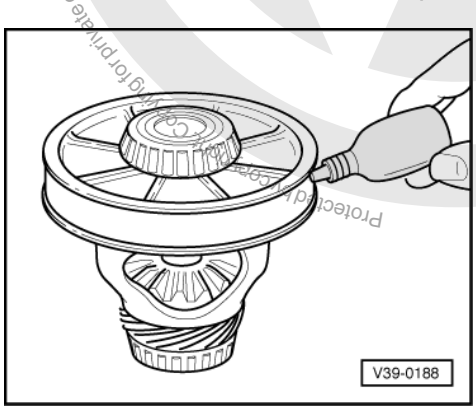

Protected by copyright. Copying for private or commercial purposes, in part or in whole, is not permitted unless authorised by Volkswagen AG. Volkswagen AG does not guarantee or accept any liability with respect to the correctness of information in this document. Copyright by Volkswagen AG.
satelettronica

- Before assembling gear wheel and differential housing thoroughly clean seating face with a wire brush and scraper (do not use abrasive paper). The seating face must also be oil and grease-free.
- -> Coat the cleaned seating face on differential housing evenly with locking fluid AMV 185 100 01.

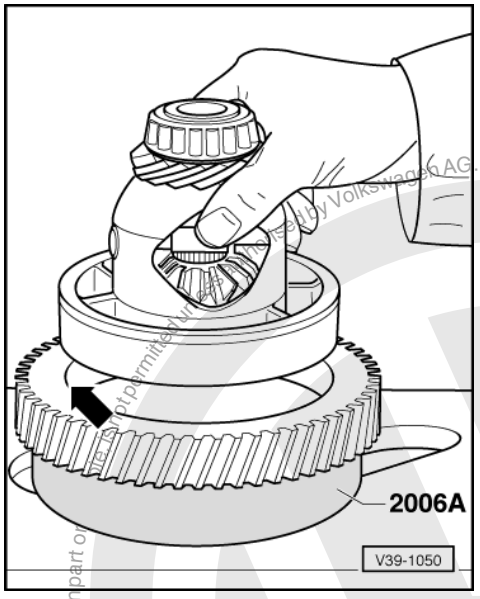

- Heat gear wheel for final drive on a hot plate to approx.150 °C, thereby continually check the gear wheel temperature with Minitester V.A.G 1362.
- -> Place ring 2006A on press table with the chamfer on inner diameter facing upwards. Place final drive gear wheel heated to 150 °C centrally on ring, with larger chamfer on gear wheel (arrow) uppermost and depression downwards. Insert differential, pretreat with locking fluid AMV 185 100 01.

Notes:

- To ensure that the gear wheel is seated perfectly fit differential quickly on to stop without a pulse.
- If when inserting differential in the gear wheel the parts cant or stick then the assembling procedure is to be stopped immediately. Press gear wheel off and start assembling sequence from the beginning again.

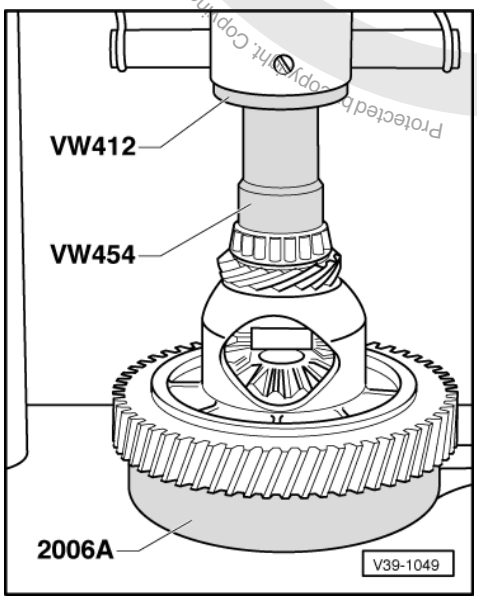

- -> Maintain the press pressure for one to two minutes after the components are assembled until a complete heat exchange is completed.

Gearboxes with bolted final drive gear wheel

- Assemble differential and final drive gear wheel with special bolts.

Protected by copyright. Copying for commercial purposes, in part or in whole, is not permitted without the consent of Volkswagen AG. Volkswagen AG does not guarantee or accept any liability with respect to the correctness of information in this document. Copyright by Volkswagen AG.
satelettronica

Tightening torques

Final drive gear to differential 70 Nm

4 - Adjustment overview

4.1 - Adjustment overview

Note:

If repairs have been carried out to the gearbox it is only necessary to adjust the input shaft, output shaft or differential if components have been renewed which have a direct effect on the adjustment of the gearbox. Refer to the following table to avoid unnecessary adjustment:

		to be adjusted:		
		Input shaft => Page 104	Output shaft => Page 122	Differential => Page 139
Parts renewed:	Gearbox housing	x	x	x
	Clutch housing	x	x	x
	Input shaft	x		
	Output shaft (final drive)		x	
	Differential housing			x
	Input shaft taper roller bearing	x		
	Output shaft taper roller bearing		x	
	Differential taper roller bearing			x

5 - Adjusting differential

5.1 - Adjusting differential

The differential must be adjusted, when

- Gearbox housing
- Clutch housing

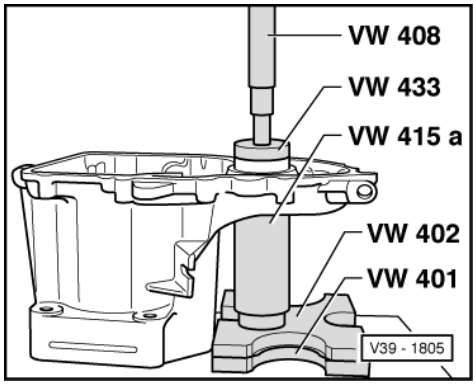

- Differential housing

or the

Protected by copyright. Copyright by Volkswagen AG.
Copyright by Volkswagen AG. Volkswagen AG does not guarantee or accept any liability with respect to the correctness of information in this document. Copying in part or in whole, is not permitted unless authorised by Volkswagen AG.
satelettronica

- Differential taper roller bearing

have been renewed.

Adjustment overview => Page 139 .

- -> Press taper roller bearing outer race (gear wheel side) with shim S1 (always 1 mm thick) into gearbox housing.

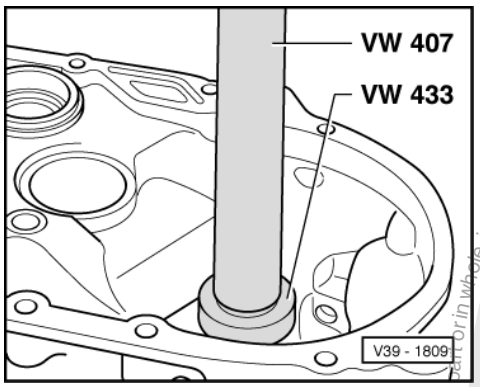

Note:

Taper roller bearing inner and outer races are paired. Do not interchange!

- -> Press taper roller bearing outer race (opposite gear wheel side) without shim into clutch housing.

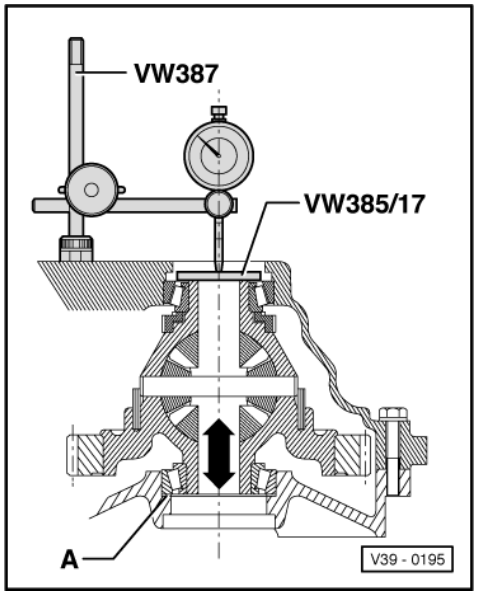

- Fit differential into gearbox housing.
- Fit gearbox housing and tighten 5 bolts to 25 Nm.
- -> Assemble measuring device and D.T.I. (3 mm measuring scale, approx. 30 mm extension).

A - Shim S1 = 1 mm thick

- Zero D.T.I. with one 1 mm preload.
- Move differential up and down, read and note play indicated on D.T.I. (Example: 1.50 mm)

Protected by copyright. Copying for private or commercial purposes, in part or in whole, is not permitted unless authorised by Volkswagen AG. Volkswagen AG does not guarantee or accept any liability with respect to the correctness of information in this document. Copyright by Volkswagen AG.
satelettronica

Note:

Do not turn differential when measuring, otherwise the bearing will settle and a false measurement will be given.

Determining shim S2 thickness

The specified bearing preload is obtained by adding a constant figure (0.30 mm) to the reading obtained for S2 (example: 1.50 mm).

Example:

Reading	1.50 mm

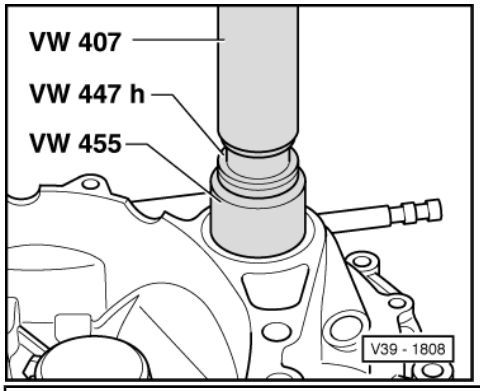

+ Preload (constant figure)	0.30 mm
Thickness of shim S2 =	1.80 mm

- -> Remove clutch housing and drive out taper roller bearing outer race.
- Fit determined S2 shim (in example 1.80 mm) and press taper roller bearing outer race again into clutch housing.
- Assemble clutch housing and tighten bolts to 25 Nm.

The following shims are available:

Size (mm)	Part No.
1.00	084 409 383 AE
1.40	084 409 383 AF
1.45	084 409 383 AG
1.50	084 409 383 AH
1.55	084 409 383 AJ
1.60	084 409 383 AK
1.65	084 409 383 AL
1.70	084 409 383 AM
1.75	084 409 383 AN
1.80	084 409 383 AP
1.85	084 409 383 AQ
1.90	084 409 383 AR
1.95	084 409 383 AS
2.00	084 409 383 AT
2.05	084 409 383 BA
2.10	084 409 383 BB
2.15	084 409 383 BC
2.20	084 409 383 BD
2.25	084 409 383 BE
2.30	084 409 383 BF
2.35	084 409 383 BG
2.40	084 409 383 BH

Protected by copyright. Copying for private or commercial purposes, in part or in whole, is not permitted unless authorised by Volkswagen AG. Volkswagen AG does not guarantee or accept any liability with respect to the correctness of information in this document. Copyright by Volkswagen AG
satelettronica

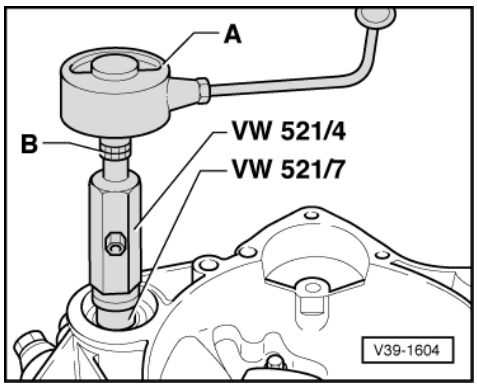

-> Checking friction moment

A - Commercial torque gauge 0 ... 600 Ncm

B - 13 mm socket insert

For new taper roller bearings the friction moment must be 120 ... 250 Ncm.

For used taper roller bearings the friction torque must be at least 30 Ncm.

Note:

Lubricate bearings with gearbox oil before checking friction moment.

Protected by copyright. Copying for private or commercial purposes, in part or in whole, is not permitted unless authorised by Volkswagen AG. Volkswagen AG does not guarantee or accept any liability with respect to the correctness of information in this document. Copyright by Volkswagen AG.

satelettronica